International
IOR Rectifier

Digital Speed Controller for Embedded High Reliability Applications

By

Jay Goetz
Sr. Staff FAE
International Rectifier
High Reliability Products
Minnetonka, MN
Jgoetz1@irf.com

Weiping Hu
Design Engineering Manager
International Rectifier
High Reliability Products
Leominster, MA
whu1@irf.com

Deb Bhattacharyya
Sr. Hybrid Electrical Design Engineer
International Rectifier
High Reliability Products
Leominster, MA
Dbhatta1@irf.com

As presented at Power Systems World 2005

Abstract

Modern "electric platform" based vehicles and aircraft for commercial and military duty are using electric motors in large numbers. The demand for higher efficiency, improved performance, lower noise and smaller controller footprint has led to development of a high reliability motor controller for vector controlled permanent magnet motors. This controller is optimized to act as a design platform, with an interface that maps a comprehensive register set to dozens of drive parameters to allow quick setup and testing.

IR's iMotion® components are used which are highly integrated yet low cost processors, gate drivers, and feedback electronics, assembled into a relatively small circuit board stack mounted on top of a power substrate. A dedicated hardware processor with embedded pre-configured sinusoidal FOC algorithm supports high reliability applications such as pumps, fans, and compressors.

This paper discusses the ease of commissioning the controller starting with basic motor and application parameters; no software is required. This allows the user to quickly create a high performance adjustable speed machine with high starting torque, accurate speed control over a wide 20:1 speed range, and capability of high inverter frequency.

Test data from a test stand is given and test data from a pump application is shown.

Electric Platforms Require Small Embedded Motor Controllers with Efficient Algorithms

Modern Electric Platforms are replacing gear driven auxiliary loads with generator fed electric motors that have POL power conditioning to provide the required motor buses. (5).

An example of this is the 787 aircraft which has deleted the bleed-air system traditionally used and replaced it with localized electric motors for such loads as environment control, hydraulic cooling, and APU starting.

Another example is the RST-V reconnaissance, surveillance, and targeting vehicle being developed for the US Marines which uses permanent magnet motors for a number of applications including hub mounted traction drive, electric power steering, and drive-by-wire. An on-board generator for produces 27KW for onboard loads and off board use.

Nowadays, system Integrators are being asked more frequently for an electric driven solution which uses permanent magnet motors because of their high torque to amp ratio, efficiency, and improved power factor. Weight is a penalty in transportation, especially in aircraft, which makes thermally efficient hybrid substrate packaging the preferred approach for power electronics. The algorithm used should allow efficient utilization of motor supply voltage and current.

Flexible Integrated Motion Control Platform

Two design platforms are being created for High Voltage (600V IGBT silicon) and Low Voltage (100V Mosfet silicon) control of permanent magnet motors. A design platform differs from a product in that it contains additional interfaces for communication, discrete/stand-alone control, and has some flexibility in the housekeeping power supply and in the motor bus conditioning. Figure 1 shows the platforms which have these options:

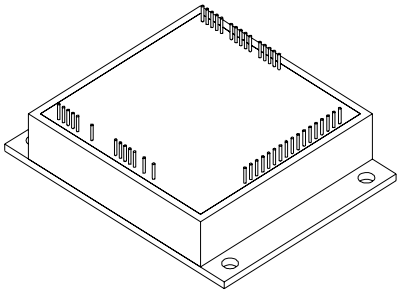

Figure 1a High Voltage Platform

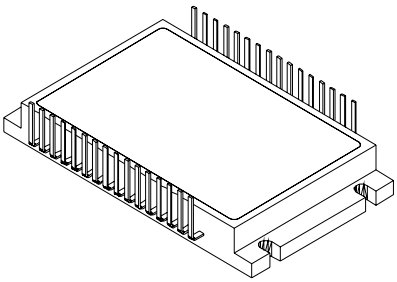

Figure 1b Low Voltage Platform

Important technical features include (1):

- Sensorless – no hall sensors or position feedback required for commutation
- Selectable Power Electronics – IGBT or MOSFET Power Stage, optimized for desired load and Vbus ratings
- Adjustable Performance – speed and current loops with adjustable gains, and adjustable PWM period and deadtime
- Varied motor usage – can accommodate PM motors with a wide range of parameters (inductance, speed, Ke/Kt, #poles)
- Configurable startup sequencing and operation
- Protections with override – bus over-undervoltage/overcurrent/improper supply voltage/substrate temperature/loss of phase/under-overspeed

Validation of mature iMotion technology in high volume markets before use in Aerospace and Military applications eliminates much uncertainty in designs which use it. Before the products described in this paper were developed, the iMotion chipset has already been designed-in and used in dozens of products including factory automation machines, white goods, and automotive controls. In fact, these chipsets have been designed into speed and position controls onboard commercial and military aircraft and land vehicles such as compressors, pumps, fans and weapons positioning.

Alhough the above characteristics are important in Aerospace and military applications, High Reliability Products also need:

- (More) Robust Functionality
- Ruggedized Packaging suitable for Embedding in “tight” locations
- Small footprint suitable for cold-wall or heat sink mounting
- Adaptable to different motors and applications
- Mil Qualification and Screening
- Long-term Availability
- Strong(er) Customer Support

Figure 2) shows an architecture which is scalable and is partitioned to meet these goals.

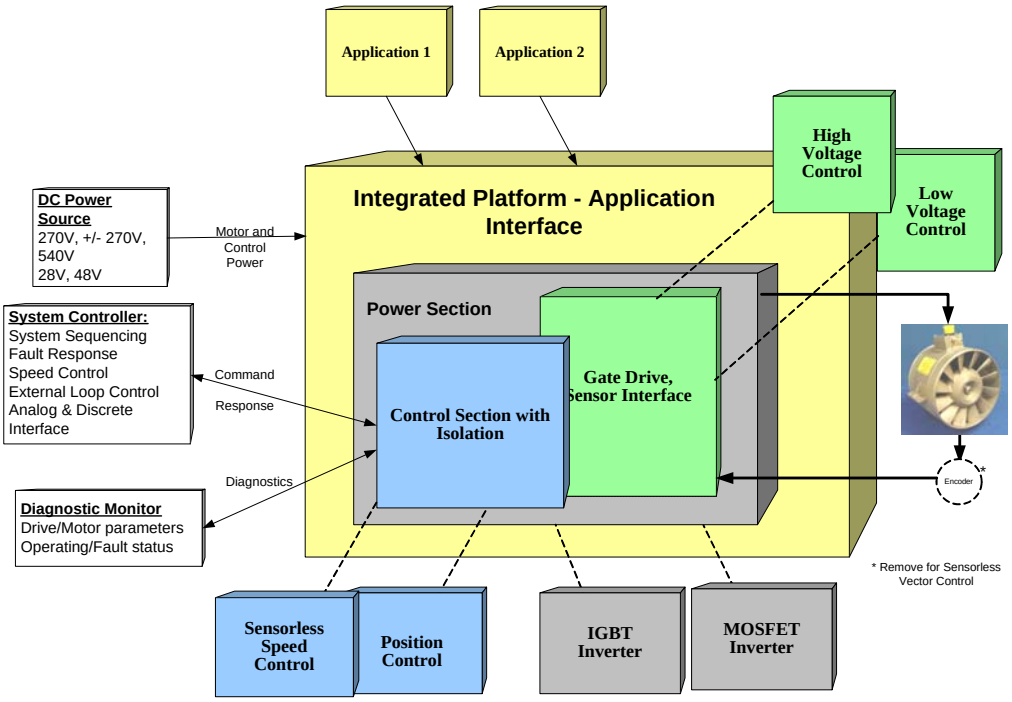

Figure 2) High Rel Integrated System Partitioning

In order to meet the needs of different load and bus voltage ratings, different DC Power Source conditioning and thermal mounting is needed. Industrial drives typically handle this by providing stackable or rail mountable modules. Embedded Hi Rel applications need to minimize size and weight and typically maximize heat dissipating mating surface to an aircraft bulkhead or cold-wall and thus do not lend themselves to rack or rail stackable modules. These “application specific” requirements best met by using a customized application interface as shown in Figure 3. This approach allows engineers to quickly bring up and validate their system without concern for the difficulty details of motor drive power electronics.

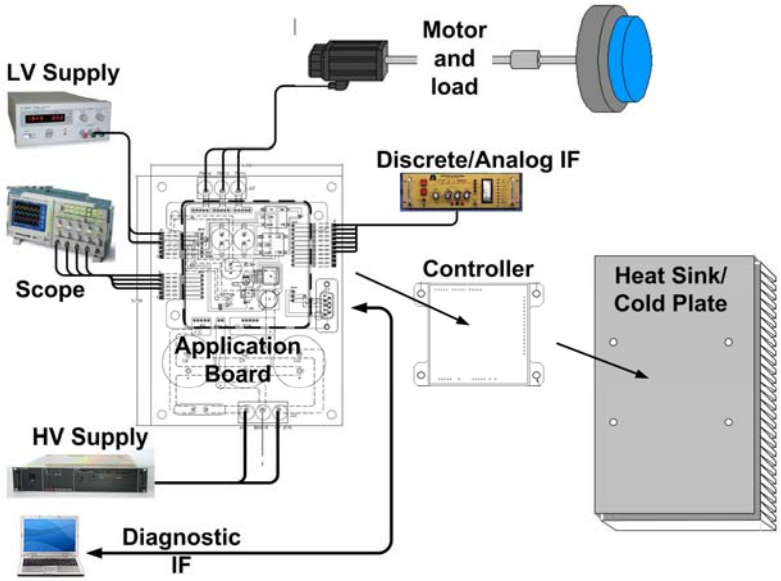

Figure 3 Application Interface

Motion Control Engine for High Reliability Sensorless Speed Control

The Sensorless Vector Control Algorithm, shown in figure 4) acts as the motion control engine for the platform. This technology eliminates the need for commutation and position feedback devices (such as Hall Sensors), which in turn reduces motor size, cost, and interface complexity, and improves overall reliability. IR's sensorless control IC provides a mature design foundation. Controller costs are contained by using commercial parts where they do not adversely affect the system reliability. IR's iMotion chipset is rated to at least –40 to +85C operation. In cases requiring extended temperature or radiation exposure, Radiation Hardened or specially packaged components are available to create a more resilient controller.
The Controller is being manufactured on IR's High Rel Manufacturing (Mil-PRF 38534 certified) line resulting in more stable hardware and ensuring better yields and fewer field failures. Designs are qualified and screened to Class H requirements to ensure each controller will operate for the required number of cycles and over the specified environment.

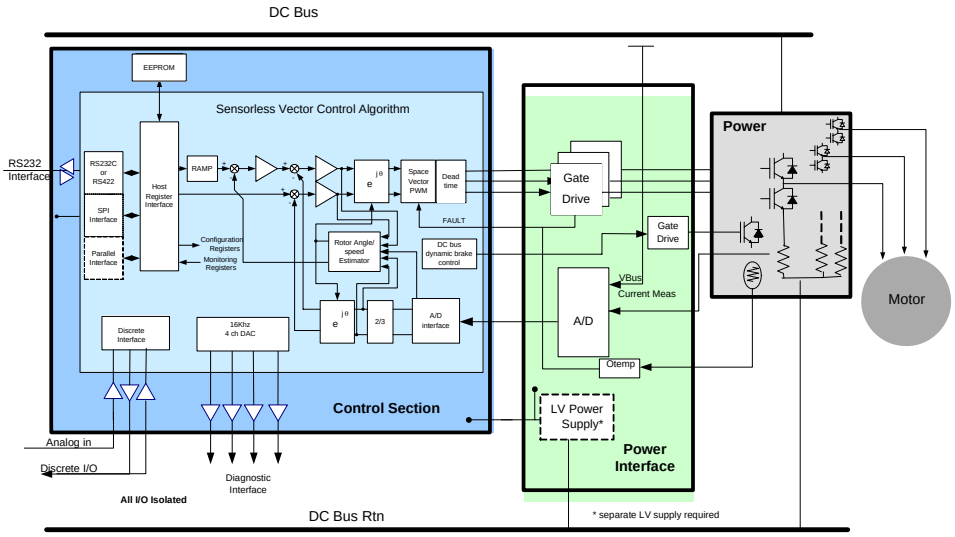

Figure 4) Sensorless Speed Controller Block Diagram

Why Digital?

Analog control of speed and torque is inflexible and often hard to tune and requires the use of commutation sensors (Hall sensors). Recent developments in digital control have allowed practical implementation of true Sensorless Vector Control with sufficient bandwidth performance to match traditional analog drives. Advances in programmable logic arrays and their support tools, have prompted conversion from software systems to even faster, parallel hardware processing systems needed to develop advanced control routines. IR's sensorless control algorithm was developed using parallel hardware processors and tools for speed and determinism.
The architecture in Figure 4 uses only leg shunt current sensing and bus voltage measurement to close the current and speed loops. The hardware is capable of of up to 60Khz PWM modulation, and algorithm loop closure occurs in 11microseconds.

Studies have shown that a preconfigured platform approach to motion control eliminates the need for digital drive specialists, DSP Programmers, Power Electronics Designers, and Thermal/Mechanical Designers. (3), (4)

Performance Goals – for Sensorless Speed Control

The following performance goals are being implemented in this platform:

- High torque at low-speed (400% brief overload at 5% of full speed).

- Adjustable startup sequence with fast detection of start-up failure and start-up retry.
- Control of high speed, low inductance motors (up to 25,000rpm) using cost effective sensors
- Ability to trade high efficiency vs low noise.
- Low Thermal Resistance base plate for cold-wall mounting
- Operation in a high-vibration environment over –40 to 85C temperature range

Some applications need high torque at low speed. A typical Torque-Speed curve which is achievable with this controller is shown in Figure 5 which shows the continuous and intermittent torque demanded of the sensorless speed controller for a PM motor application. From this diagram it is seen that the control should provide continuous torque at up to 100% for rated speed and 200% for 50% rated speed and 400% intermittent overload torque at 5% of rated speed.

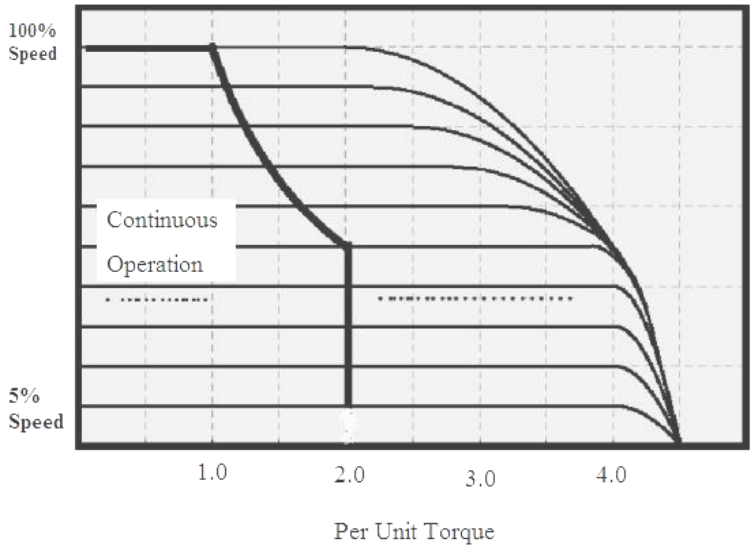

Figure 5) Torque Speed Curve

Retry Function

A startup retry function allows a pre-set number of retrials when the motor shaft is jammed or motor starting torque cannot overcome shaft startup friction. Figure 6) shows the retry sequence due to restraint of the rotor, which is subsequently released prior to the 4th try. The torque current (orange) and speed (blue) are shown followed by the phase current (green).

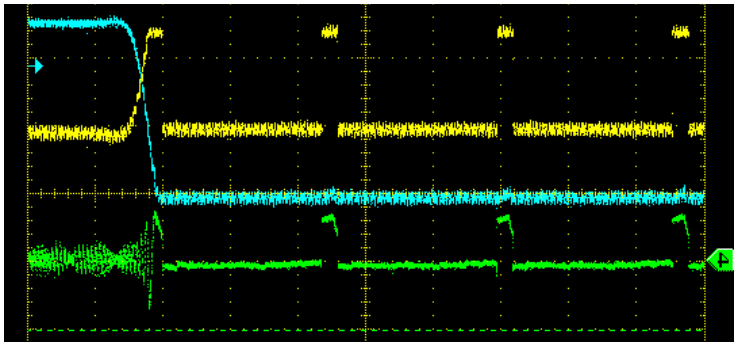

Figure 6) Retry Sequence

Configurable PWM Option

The configurable sensorless speed controller uses a versatile Space Vector PWM algorithm with several optional modes including 2phase/3phase, symmetric/asymmetric operation, and programmable deadtime.

Figure 7) illustrates the PWM waveforms for a Symmetric (center aligned) 3phase Space Vector mode of operation

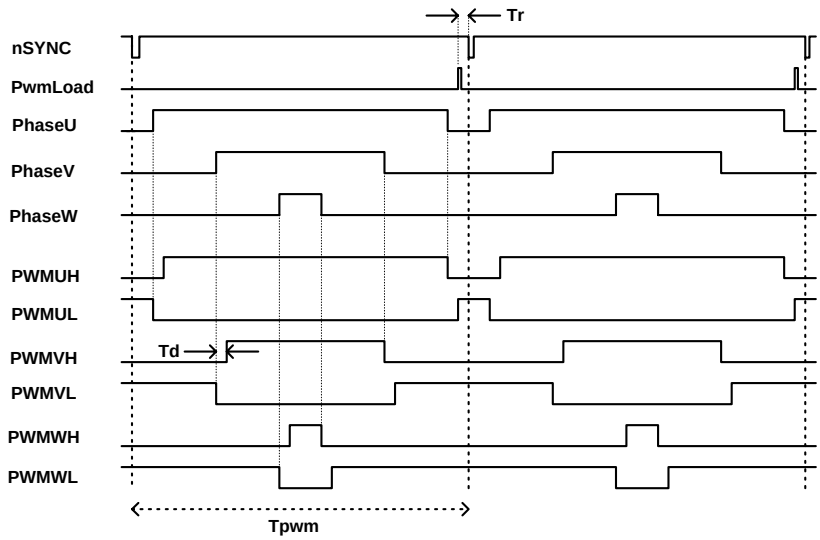

Figure 7) 3-phase Space Vector PWM

Symmetric or Asymmetric operation is available for PWM waveform generation.
With Asymmetric PWM mode, the inverter voltage the inverter voltage can be changed at two times the rate of the switching frequency, effectively doubling the bandwidth of torque control. Three-phase and two-phase Space Vector PWM modulation options are provided for the controller. The Volt-sec generated by the two PWM strategies is identical; however with 2-phase modulation the switching losses can be reduced significantly, especially when high switching frequency (>10Khz) is employed. After startup, the drive can be transitioned from 3phase to 2phase modulation for low-loss operation. In this way, maximum torque can be delivered during startup and noise can be minimized during normal running conditions. There are two types of two-phase modulation schemes provided. Figure 8) illustrates the Inverter Pole voltage and motor currents for different types of Space Vector PWM strategies available.

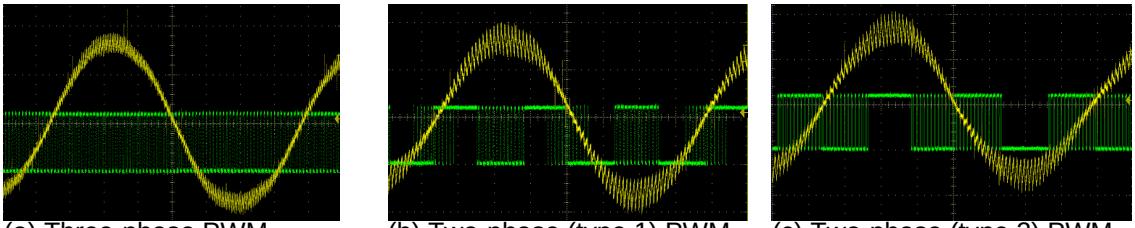

(a) Three-phase PWM (b) Two-phase (type 1) PWM (c) Two-phase (type 2) PWM

Figure 8. Different Types of Space Vector PWM

Hardware Description and Protection Features

Figure 8) shows the packaging for the 270V sensorless speed controller, rated at 1-5KW power output, depending on thermal connections to heat sink or cold wall.

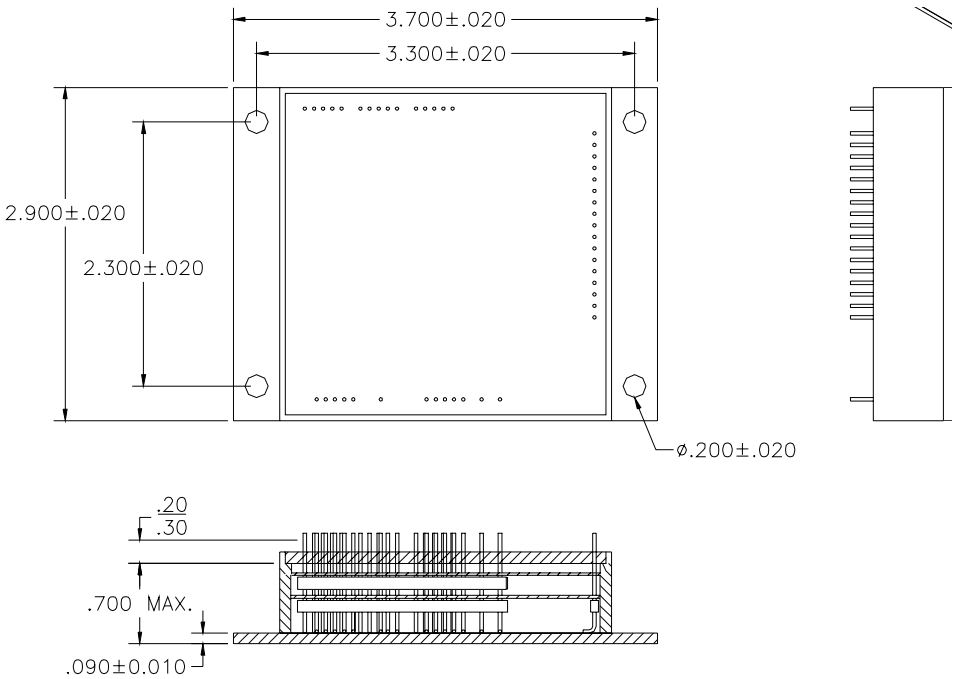

Figure 9) Packaging and Hardware (approx 3.7 x 2.9 x 1.5")

The board stack shown in figure 9) contains the IMS, gate drive/sensor interface, and control boards. The IRMCK203 is used on the control board. Underneath the control board is the Gate Drive/Sensor Interface board, which contains gate drive, sensor interface, and protection features. IR2214 gate drivers are used on the Power Interface PCB. These are half bridge gate drivers rated for switching power devices with up to 400V common-mode output swing. These drivers have low quiescent current, and manage all the half-bridge short circuit faults by detecting and turning off any IGBT which goes into desaturation before the component is destroyed. A dedicated soft shut down pin signals current faults and helps to reduce EMI emissions.

A thermal clad Insulated Metal Substrate (IMS) is used as substrate and base-plate. IMS substrates are more mechanically robust than thick-film ceramics and direct bond copper construction and provide a cost effective solution for the desired temperature range. If extended temperature operation is expected,an AlN DBC substrate can be used instead. IR's Low Vce-sat, fast switching NPT IGBTs and soft recovery FREDs are soldered directly onto the substrate to reduce thermal resistance. A special coating is used to protect the die from humidity and contamination. A thermistor, mounted on the base plate, is used for overtemperature detection, with programmable setpoint, nominally set to 110°C .

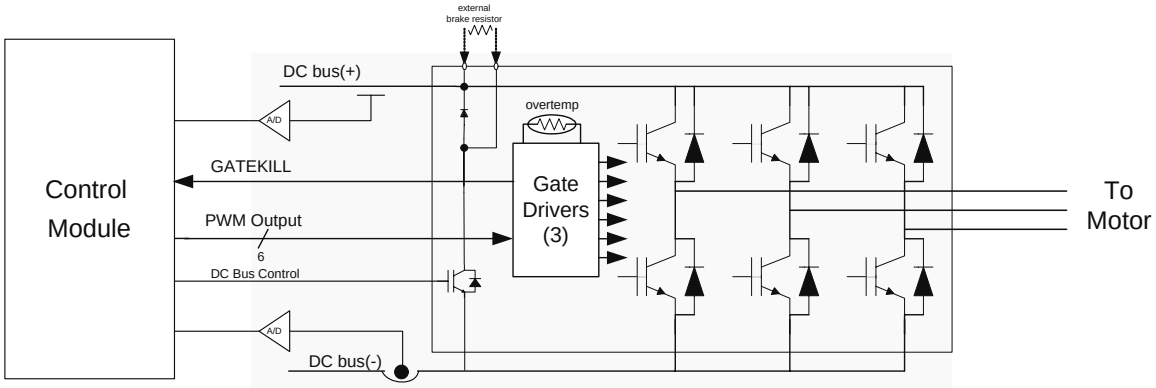

Figure 10) Protection Features

Protection Features (Figure 10)

A desaturation event also triggers the GATEKILL signal which in turn initiates a fault response (soft shutdown). When an overcurrent condition occurs, all PWM output gate signals are disabled.
Phase Loss detection is provided of a loose wire (u, v, w) between drive and motor.
Overvoltage and undervoltage trip levels are configured as drive parameters.
The braking switch, mounted on the controller IMS, operates according to Bus voltage levels as a DC bus voltage limiter and is effective in slowing down motors. An external braking resistor absorbs regeneration energy from the motor.
Other faults detected include Overrun and Zero speed faults. The ZeroSpeed fault indicates loss of closed loop "lock".

Drive Commissioning and Diagnostics

To commission the drive, a Drive Parameter Spreadsheet is available. The user enters high-level parameters which are translated into internal format and transferred to the host register interface in the control processor (using the ServoDesigner tool) through the communication interface.

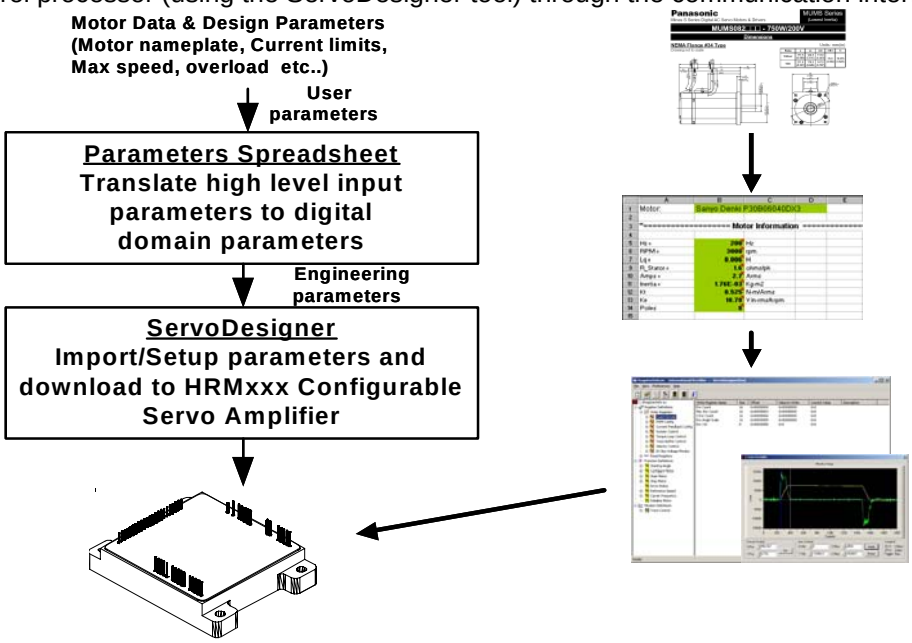

Figure 11) Drive Commissioning Process and Tools

The Drive Parameters spreadsheet helps automate the procedure of calculating the appropriate values for configuration and tuning parameters. In the spreadsheet, you enter motor nameplate and application data, and embedded formulas calculate the appropriate values to be written to the control's internal registers via a tool called ServoDesigner. A portion of the parameter spreadsheet is shown in Figure 11) with values appropriate for a typical servo motor

Figure 12 shows a demonstration test called "demo run" which can be executed via ServoDesigner. This is a test sequence to demonstrate the ability of the controller to respond to commanded speed changes.

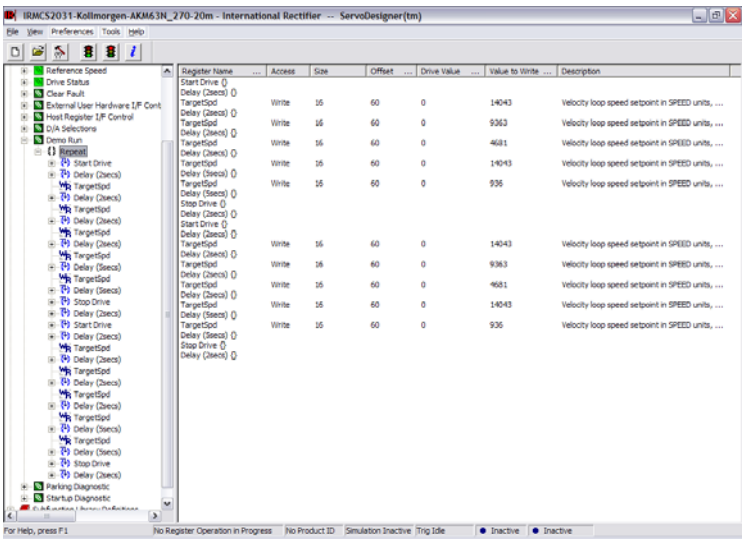

Figure 12) Demo Run – Speed Change Test

Test Results

Figure 13 shows Test data from 270V controller running a constant 5Arms load at 270V bus. Shown top to bottom are U phase current, VUV, and V phase current:

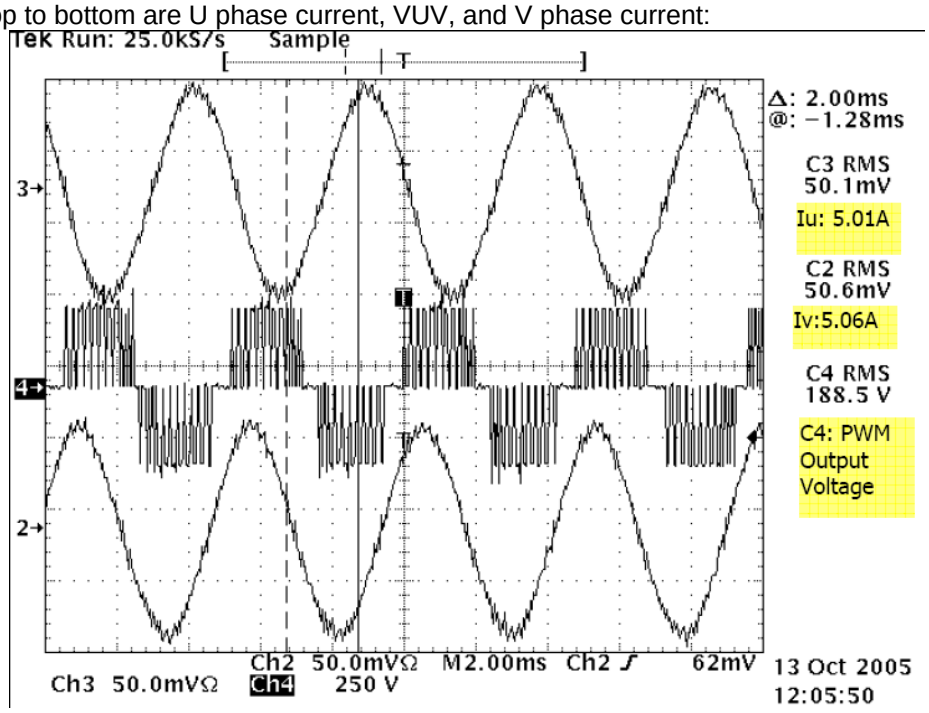

Figure 13) phase current and line-line voltages for 270V controller running at 5Arms

Figure 14) shows steady state tests of an 11,000 rpm motor + pump combination. Shown top to bottom are Phase W current (Current Probe at 5A/V), and Alpha Voltage, and electrical angle (DAC outputs). The rounded electrical angle ramp wave is indicative of the bandwidth limit on the DAC outputs

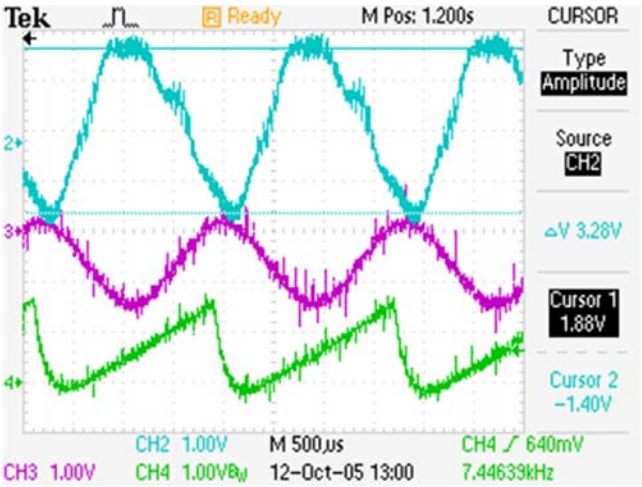

Figure 14) 11,000 rpm pump performance

Summary

A new sensorless speed controller family has been introduced for use in High Rel applications requiring high performance in a compact package.
This controller is based on IR's iMotion chipset, with enhancements in critical areas including power density, small size and efficiency.
Future controllers are planned for closed loop servo actuation of loads requiring accurate zero-speed and 4 quadrant control. These will also use an FOC vector control algorithm.

References

(1) "Compact, Sensorless Speed controller", Power Systems World – October 2004, J. Goetz, Weiping Hu, Deb K Bhattacharyya
(2) "Sensorless, Sine-Commutated Speed/Torque Control of PM AC Synchronous Motors", Embedded Systems Conference – Feb 2004, J. Goetz and E. Ho
(3) Ansoft Inc presentation "Rapid Design and Prototyping of Motors and Drives", Motors and Drive Systems 2004 - 2/3/2004
(4) Second Dependable Software Technology Exchange – June 1994 - A report prepared for the SEI (software engineering institute) Joint Program Office HQ ESC/AXS, 5 Eglin Street Hanscom AFB, MA 01731-2116, Copyright© 1994 by Carnegie Mellon University
(5) 5th Annual Electric Platforms Conference, Washington DC, April 18-20, 2005