International
IOR Rectifier
THE POWER MANAGEMENT LEADER

AUTOMOTIVE

Intelligent Power Switch (IPS) Switching & Diagnostic Capabilities

By X. de Frutos and A. Mathur, International Rectifier

INTRODUCTION

Intelligent Power Switches (IPSs) are fully protected switches. This Design Tip explains both the diagnostic features offered by these products, as well as their switching behavior.

1. DIAGNOSTIC CAPABILITIES

In this section, we will look at how IPSs diagnostic features indicate over-temperature, over-current, and over-load conditions.

1-1 High Side IPS Diagnostic Capabilities

Most high side IPSs offer a dedicated diagnostic output pin (DG), which diagnoses the following conditions:

• An over-current condition (OI) occurs when the IPS is either in current limiting or in current shutdown mode. This condition causes the DG signal to react as shown in Table 1.

• An over-temperature condition (OT) is diagnosed by the IPS51, IPS52, and IPS54XX series as shown in Table 1. As indicated in Table 1, devices with an inbuilt hysteretic-temperature-protection feature cycles the DG output under an OT condition.

• An open-load condition (OL) is detected by all High Side IPS devices. There are two methods of detecting an OL condition. First, as in the IPS54XX series, the DG output is based on the current level of the load. For these devices, however, the DG output cannot distinguish between OI, OT and OL conditions. Second, as in the IPS51XX and IPS52XX series, open-load is detected by sensing the load voltage. To do so, the IPS51XX and IPS52XX series need an additional Vcc pull-up resistor on the output. If the switch is OFF when DG flags a fault, OL has occurred. If the switch is ON, it is either an OI or an OT condition.

Note, however, that a fault when the IPS is OFF indicates

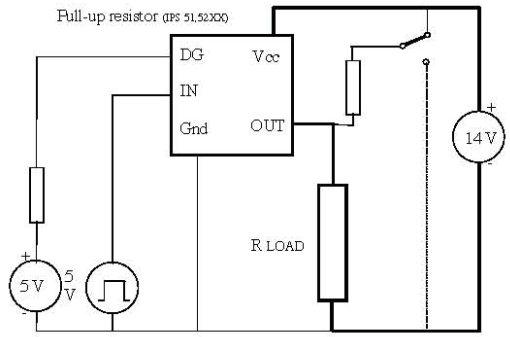

I open load = current threshold considered for open load detection (A)
Vslh = open load detection voltage (typ. 3 V)
R pull-up = (Vcc - Vslh) / I open load

Figure 1: Diagnostic Circuit

Condition	IN	OUT51,52XX	OUT54XX	DG 51,52XX	DG54XX
Normal	H	H	H	H	H
Normal	L	L	L	L	H
Open load	H	H	X	H	L
Open load	L	H	X	H	H
Short-circuit	H	I Limit.	L (latched)	L	L
Short-circuit	L	L	L	L	H
Over-temperature	H	L (cycling)	L (cycling)	L	L (cycling)
Over-temperature	L	L	L	L	H

Table 1: Truth Table for Diagnosis of Problem

Figures 2a & 2b show the open load timing diagrams for IPS51XX, IPS52XX and IPS 54XX parts.

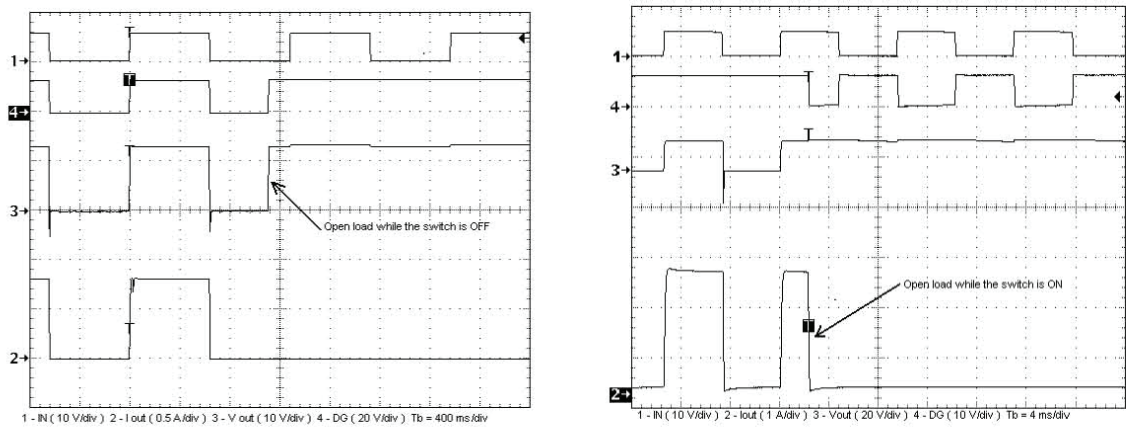

Fig. 2: Open Load Timing Diagrams (a) IPS 51,52XX (b) IPS 54XX

either an OL or else a short to Vcc. To differentiate between these last two, switch the pull-up resistor to ground. An open-load will cause the DG pin to stop indicating a fault, while a short to Vcc would continue to show a fault.

Figures 2a & 2b show the open load timing diagrams for IPS51XX, IPS52XX and IPS 54XX parts. Note that, for the IPS 54XX, turning on with large inductive loads will delay the DG signal because of the time needed for
the current to reach the open load threshold.

1-2 Low Side IPS Diagnostic Capabilities

A status signal can be added to low side switches by adding the circuitry shown in Figure 3, which generates a logic signal corresponding to overtemp and over-current shutdowns. The RC delay should be adjusted in order to mask fault indication during a positive going edge at IN. Overcurrent and over-temperature are detected only during an ON state.

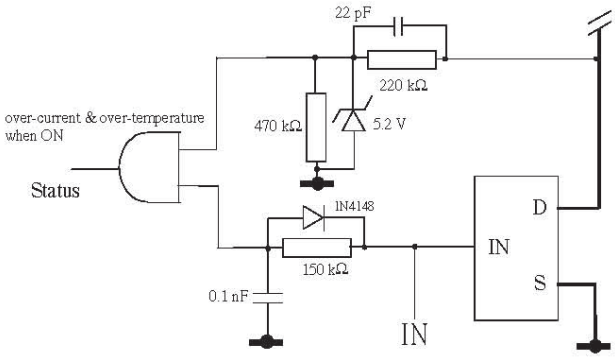

Figure 3: Low Side IPS Status Schematic.

2. SWITCHING CHARACTERISTICS

Each of the 3 different types of IPS devices has a different reference, which, in turn, affects their switching characteristics. Low-side IPSs and regular (or grounded) high-side IPSs are usually driven with 5 V logic signals.

Low-Side IPS:

The triggers on the low side IPS inputs are referenced to the source. To guarantee a proper switching waveform, a maximum of a 1 ms rise time is required for the input signal. As shown in Figures 4a and 4b, one can control the switching characteristics, i.e. the dI/dt curve, by adding a resistor in series with the input. This resistor should not exceed 10 k .

Regular High-Side IPS:

Regular high-side IPSs have a hysteretic input, and therefore an input resistor in series has no effect on switching. Figure 4c & 4d show typical switching waveforms.

Vcc referenced Input High-Side IPS:

Vcc referenced Input high-side IPSs have a hysteretic input referenced to the Vcc pin. Again, an input resistor in series has no effect on switching. IPSs protect against electrostatic discharge on the functional pins (IN and DG), by using a zener diode between ground and the pin concerned.

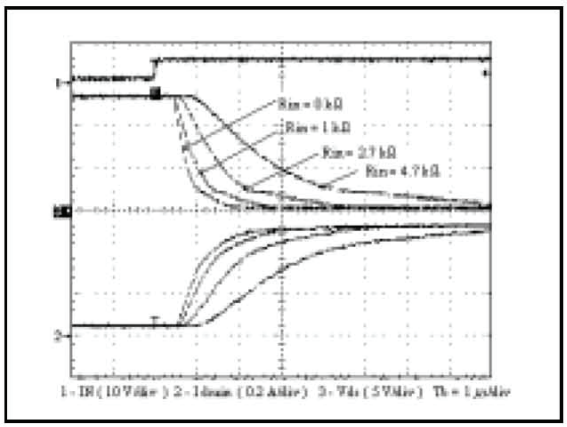

Figure 4a - IN resistor effect on turn-on

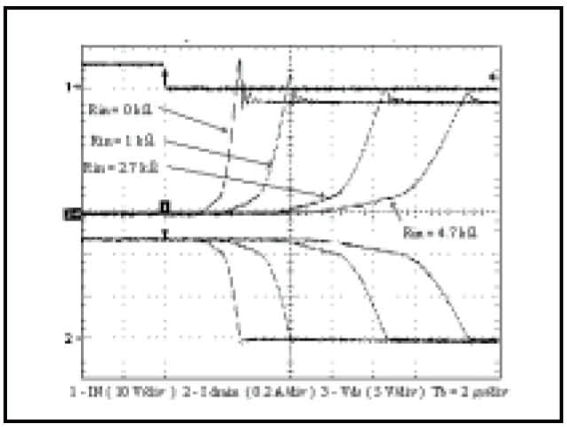

Figure 4b - IN resistor effect on Turn-off

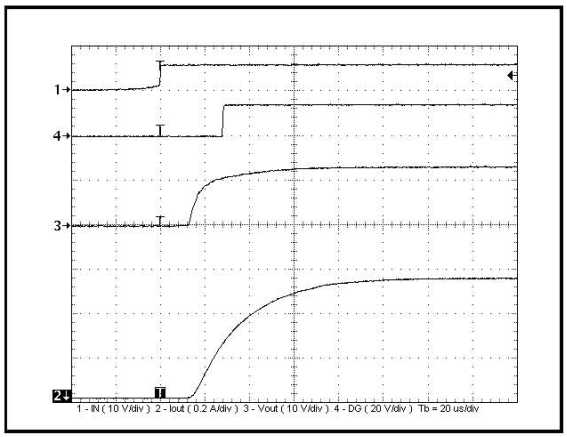

Figure 4c - High side switch turn-on waveforms

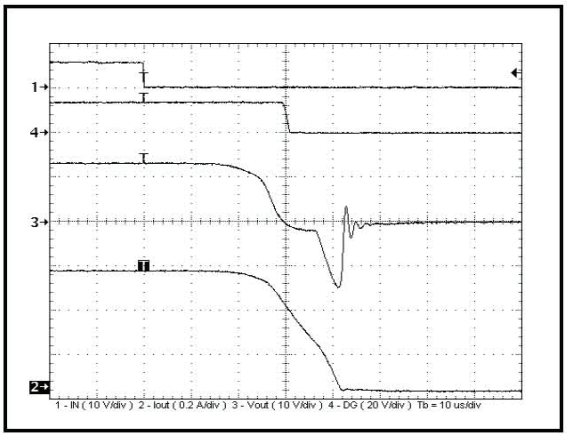

Figure 4d - High side switch turn-off waveforms

Figure 4: Turn-on and Turn-off Waveforms

This zener can also be used as a voltage clamp so long as its current doesn't exceed 5 mA

3. HIGH FREQUENCY OPERATION

The switching frequency of an IPS device is limited by a possible thermal run-away condition. During a short-circuit at high frequencies, for instance, the PWM generator will reset the device at each cycle, and will thereby cause over-heating. To avoid over-heating, the maximum allowable frequency for a free running PWM generator can be estimated using the formula:

Fmax. (Hz) < [150 - Tamb.] / [Rth' . Esc]
where :

Tamb = maximum ambiant temperature (°C) ;

Rth' = total junction / air thermal resistance (including heatsink effect) (°C/W)
Esc = short-circuit energy (J).

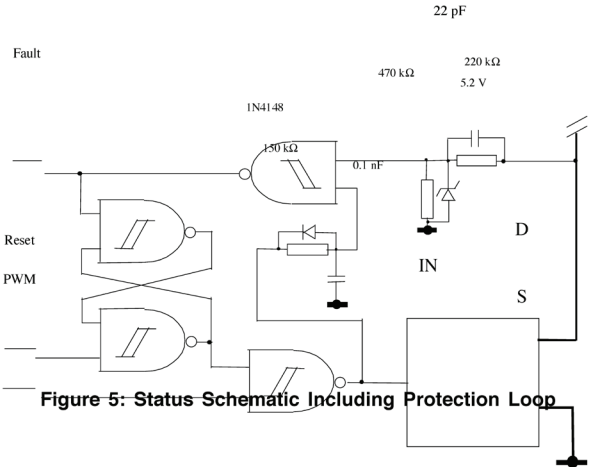

Figure 5: Status Schematic Including Protection Loop

Figures 6a and 6b show the switching waveforms and the protection loop effect.

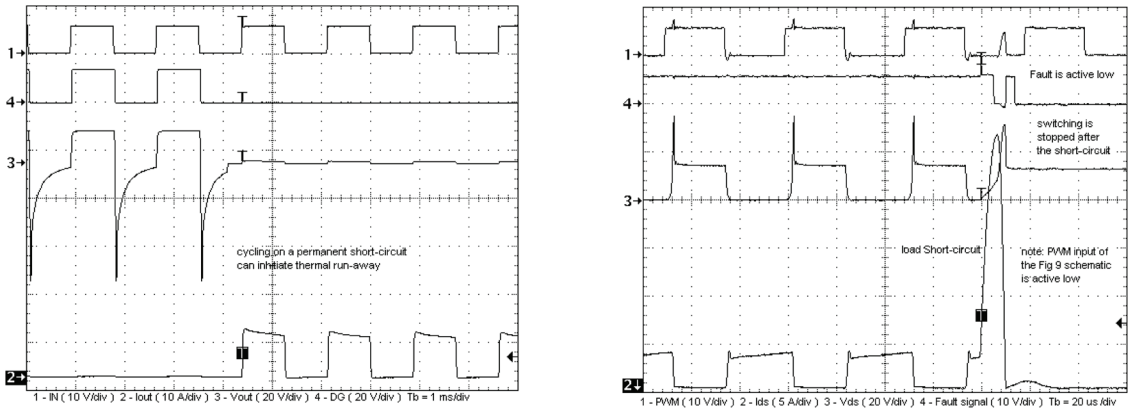

(a) High Side **(b) Low Side with Protection Loop**

Figure 6: Switching Waveforms.

Low Side IPSs are able to operate at higher frequencies if the PWM generator features an overall protection loop (as shown in Figure 5), in which the protection loop stops the pulses as soon as a missing cycle is detected on the load. With its efficient short-circuit protection, thermal runaway is avoided, and therefore a far higher operating frequency can be chosen. Also, a microprocessor can easily integrate this protection function using either the DG output or the Low Side IPS status schematic (in Fig 3), in conjunction with the protection loop in Figure 5. The component values in Figure 5 must be adapted according to the operating frequency.

4. CONCLUSION

This Design Tip explains the Switching and Diagnostic capabilities of the IPS devices. For information on the basic protective features offered by these devices, refer to Design Tip 99-4. Design Tip 99-6 offers an in-depth understanding of IPS operations in an automotive environment.