IGBT operating frequency

Energy Saving Products BU
July 2013

International
IOR Rectifier

What is the best operating frequency?

It's the *lowest* frequency compatible with the application's requirements for performance and cost

Operation at higher frequencies:

- increases component losses

switching losses in semiconductors, RMS losses in capacitors, copper and core losses in inductors

- increases cost of components

more advanced semiconductors, better quality reactive components, more expensive thermal management

- increases complexity of design

EMI qualification is more difficult, PCB layout and thermal management require special attention and advanced simulation tools

The advantage of operation at high frequency:

- Smaller capacitors and inductors: higher power density has become a requirement in many applications (SMPS, UPS, PFC, welding).
Equipment is smaller and lighter. More power out of the same form factor.

In some applications high frequency is a requirement:

Induction heating, video displays, surgical equipment.
Operation over 18kHz may be required to eliminate acoustical noise.

The magic of the Current-v-Frequency curve

A picture is worth a thousand words

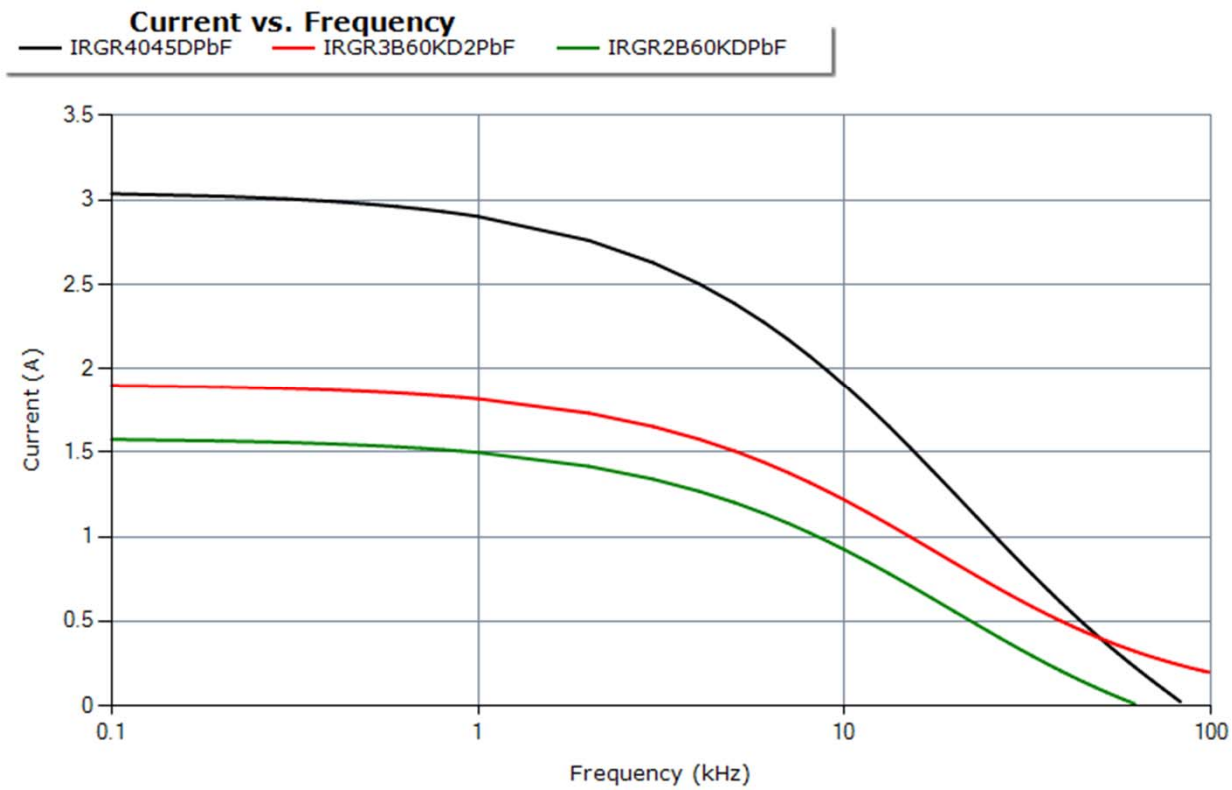

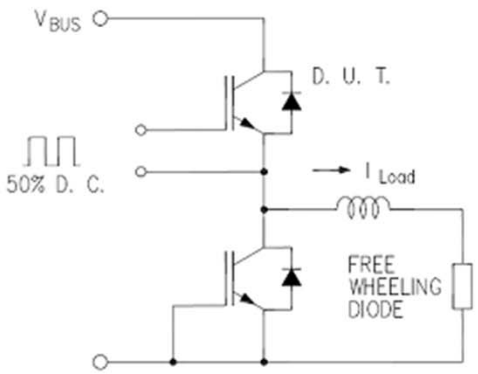

Sapplication: surface-mounted buck converter operating at a given ambient temperature: As frequency goes up, output current goes down. Inductors and capacitors become smaller.

The balance between conduction and switching losses

Some IGBTs are better at lower frequency, some at higher frequencies

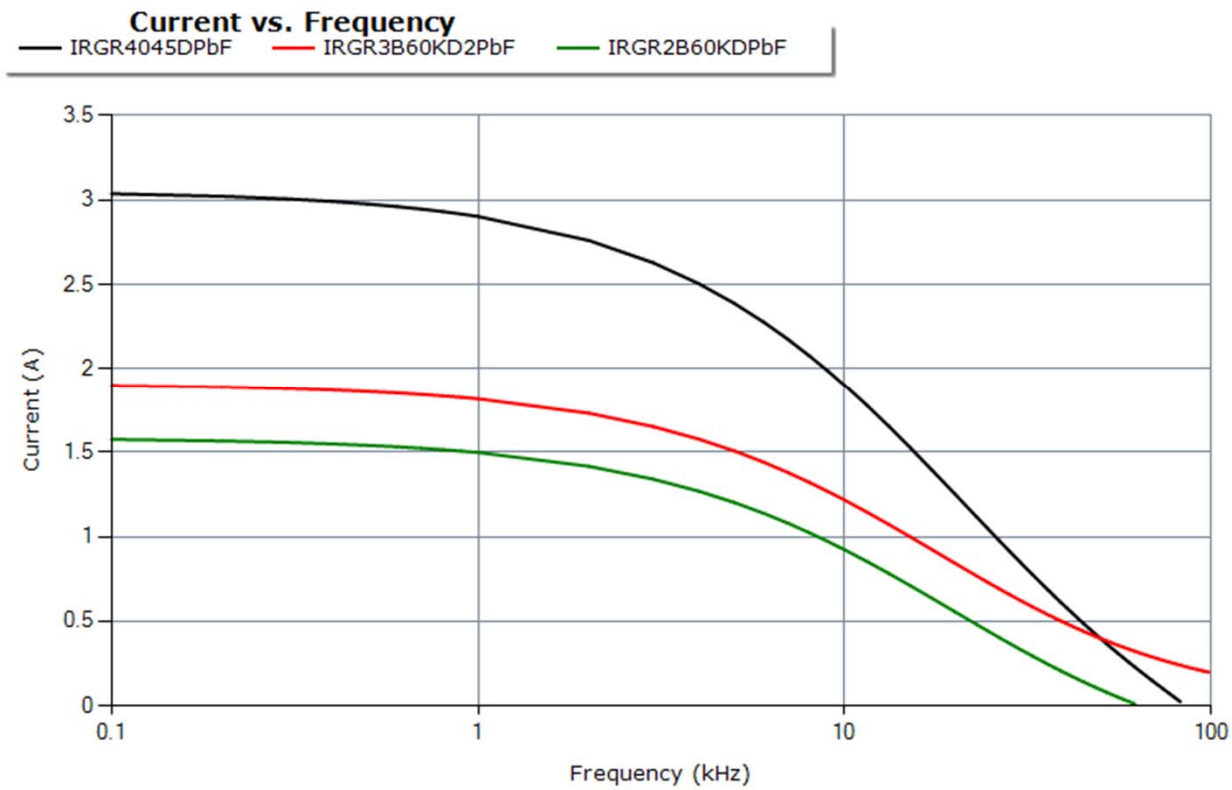

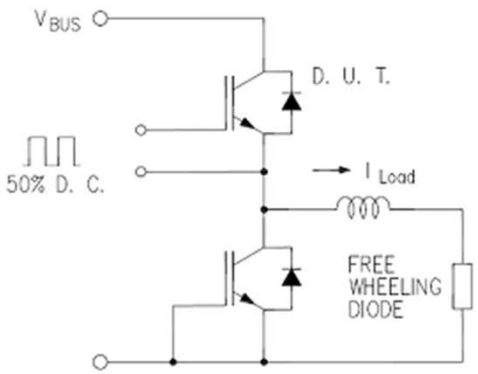

The IRGR4045 (trench) has much superior conduction characteristics than the other two IGBTs: at low frequency it can carry much more current. Its current-carrying capability degrades more rapidly as frequency increases, a sign of higher switching losses. Die sizes are approximately the same

What is the frequency limit of an IGBT?

The limit is the frequency at which an alternative solution becomes more cost-effective

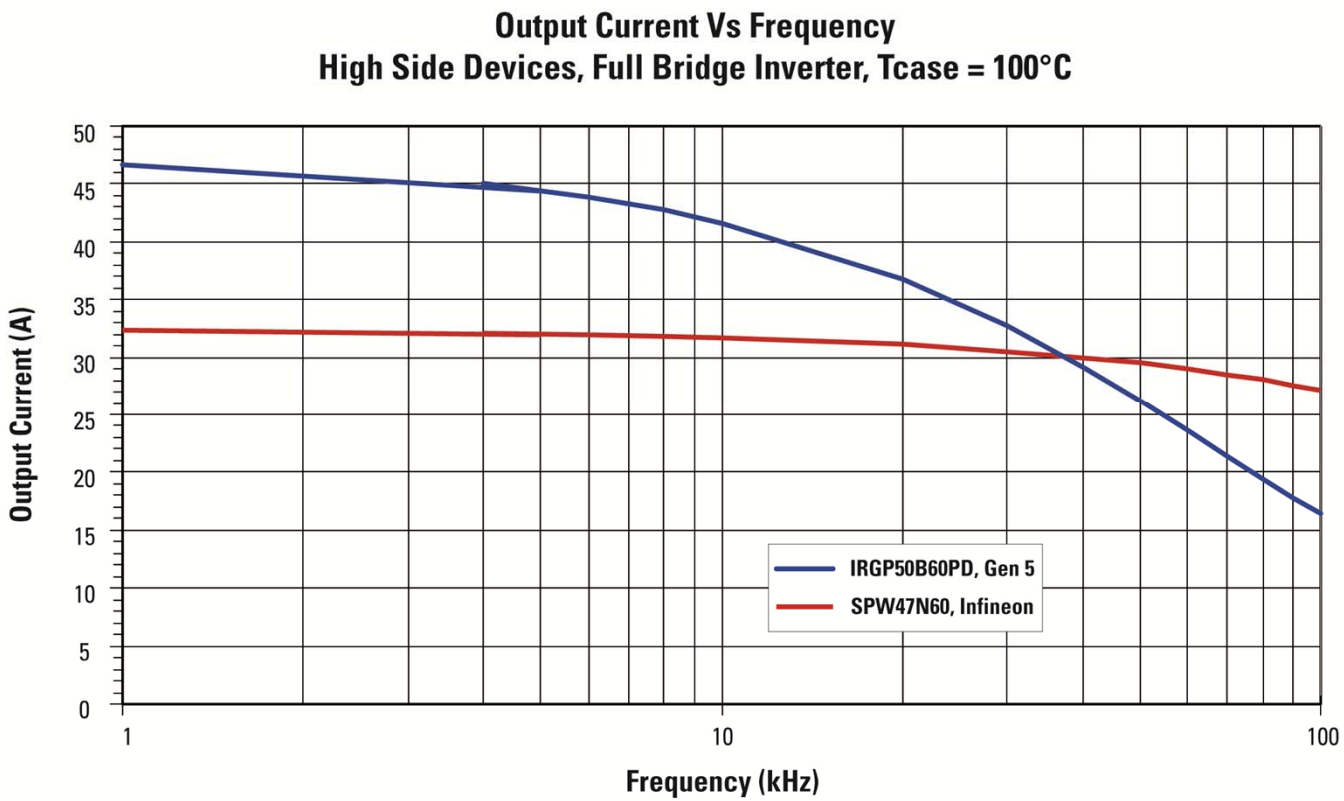

At low frequency the IGBT delivers more current than a super-junction MOSFET, while the FET performs better at higher frequencies. The cross-over in this case is around 38kHz. Below 38kHz, the IGBT would be the device of choice, above it would be the FET.
This curve does not take into consideration some important factors, like price and diode performance.

What is the frequency limit of the technology?

The IGBT is a minority carrier device. Its frequency performance is intrinsically inferior to an equivalent majority carrier device

For more details, please follow the link to appnote AN-983, Sections 1, 2 and 3 AN-983
See also AN-990 Section 5: AN-990

Our IGBTs are being used in industrial PFCs (over 1 kW) at frequencies over 66kHz