International
IOR Rectifier
THE POWER MANAGEMENT LEADER

MOTION CONTROL

iMotion™* Integrated Design Platform for Sensorless Control of Washers

Features

Digital Control
- Sensorless control of energy-saving motors used in washers
- Motion Control Engine™ eliminates control software coding
- Customer application code in co-integrated 60MIPS microcontroller

Analog Interface
- Embedded Analog Signal Engine™ integrates all signal conditioning and conversion circuits for single shunt-based motor current feedback
- Benchmark high voltage ICs for analog interface
- Uses latest Trench IGBTs for efficient inverter switches

Power Modules
- Intelligent power modules integrate HVIC and Trench IGBTs to deliver complete power stage

Reference Design
- Development board and software tools for rapid evaluation and system development

The IR Advantage

Digital Control
- Simplifies design
- Speeds up development for faster time-to-market
- Eliminates need for external microcontroller

Analog Interface
- Minimizes noise and increases performance
- Greater protection and increased reliability
- Efficient, low thermal unit cost

Power Modules
- Simplifies assembly
- Reduces thermal unit cost

Variable Speed Motor Drive

IR's sensorless control platform for direct-drive Permanent Magnet Synchronous Motor (PMSM) washing machines, featuring an embedded Field Oriented Control (FOC) algorithm for high-dynamic torque control, improves washing cycles consuming less hot water to save up to 70 percent of energy usage. Optimized field weakening control maximizes the efficiency of the spin cycle in the extended speed range.

This latest addition to the iMOTION™ family features a mixed-signal controller and companion intelligent power modules as well as algorithms, development software, and design tools. Combined in one easy-to-use platform, iMOTION for washers simplifies design of variable-speed motor-control in both horizontal and vertical axis washing machines, accelerating time-to-market and reducing overall system cost.

*IR's iMOTION (ai mo shan), representing the intelligent motion control; Motion Control Engine and Analog Signal Engine are trademarks of International Rectifier.

iMOTION™ Integrated Design Platform for Washers

The application of direct-drive PM motors in washing machines improves system dynamics and reduces overall system cost due to a simpler mechanical structure. Typically, Hall Effect sensors are deployed to provide rotor position information necessary for control of these motors, adding cost and complexity to the motor design. The iMOTION platform enables sensorless sinusoidal current control, completely eliminating Hall Effect sensors and delivering smooth torque over an extended speed range.

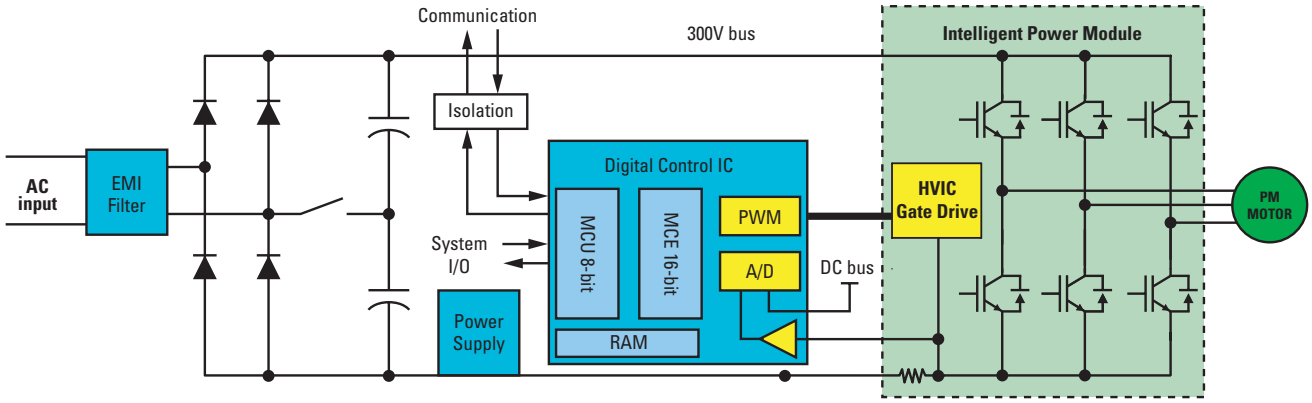

iMOTION™

- Complete appliance control system on a single IC including PFC
- Embedded motor control algorithms with independent application layer processor
- Low noise sensorless control using dc link current sensor only
- Appliance-specific HVICs and intelligent power modules

Sensorless motor control for washers

- Drive-drive motor control without Hall sensors
- Complete appliance control system on a single IC
- Embedded motor control algorithms with independent application layer processor
- Motion Control Engine™ eliminates algorithm software coding
- Low noise, sensorless control using dc link current sensor only
- Appliance-specific HVICs and intelligent power modules

Higher performance

IR's iMOTION…integrates digital controllers, analog interface and power modules to provide application-specific integrated design platforms for variable speed sensorless motor control in Permanent Magnet Synchronous Motors (PMSM) for appliances.

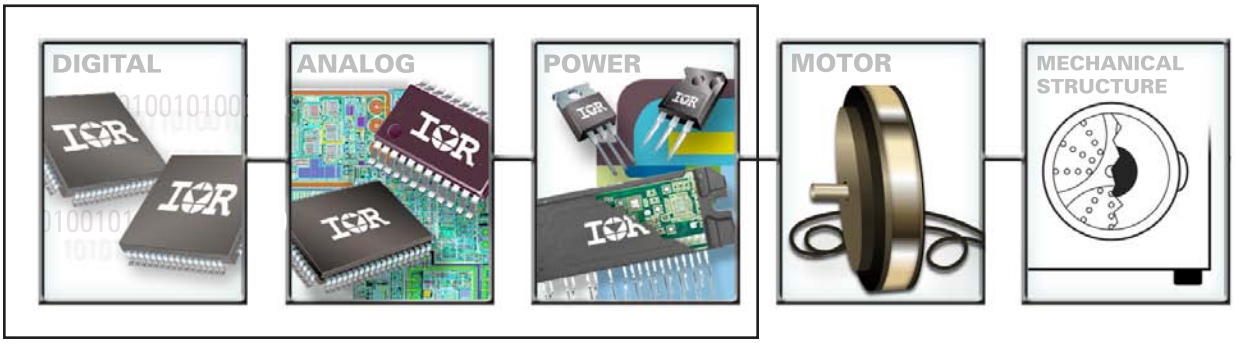

*IR's iMOTION (ai mo shan), representing the intelligent motion control; Motion Control Engine and Analog Signal Engine are trademarks of International Rectifier.