PCB Layout of SupIRBuck Gen 2.0

EPBU

Date (10/16/08)
Rev #1.1

International
IOR Rectifier

Outline

- Objective
- Schematic
- Key Layout Considerations
- Layout Example- Single Sided Board
- Layout Example- Double Sided Board
- Summary

Objective

Providing POL PCB layout Guideline of SupIRBuck Designs to achieve:

- Minimum noise at the output
- Avoiding false fault trips due to noise injection
- Clean switching node waveforms (no jitter)

General Schematic for IR 384x/3x

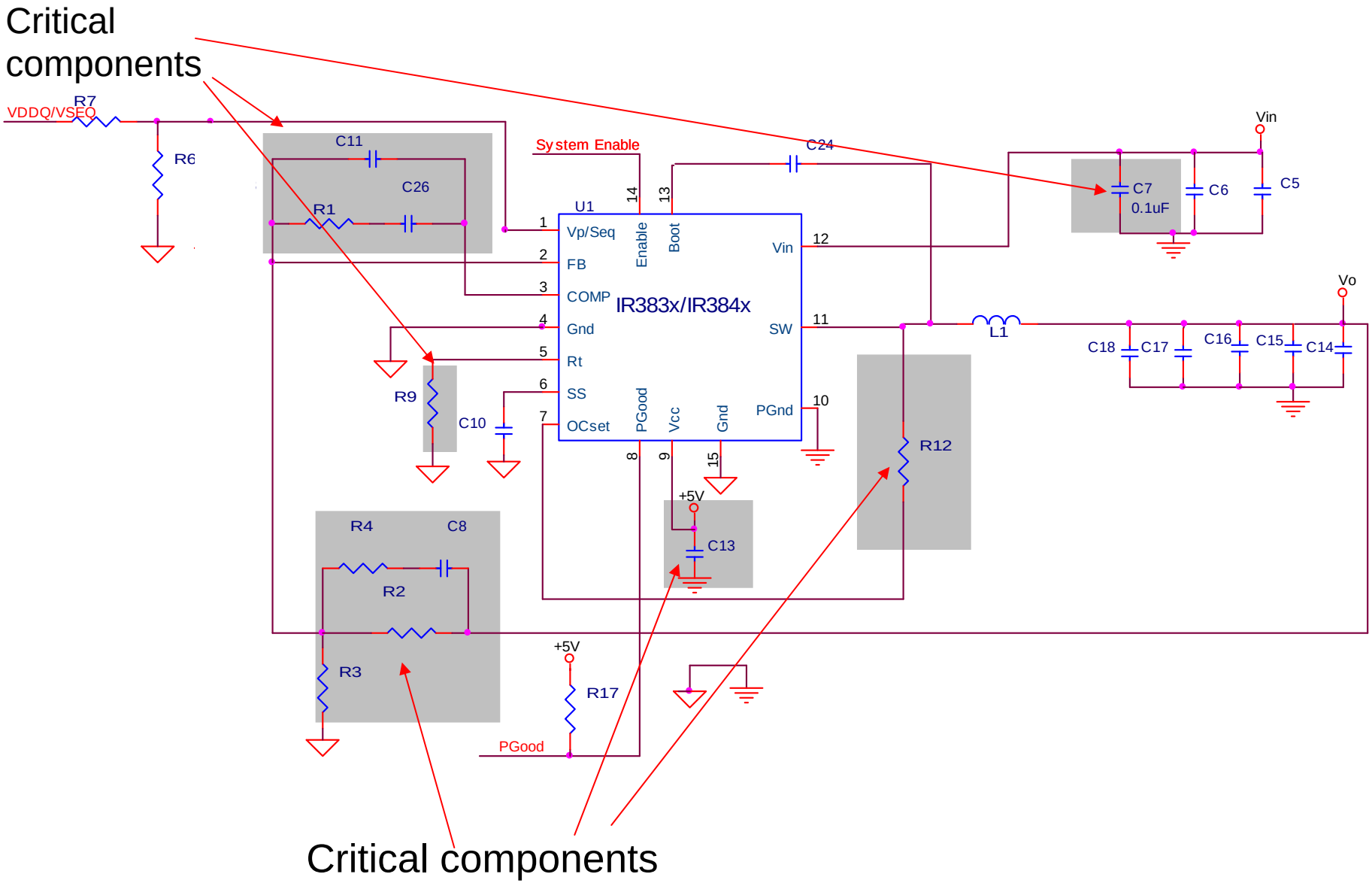

Key Layout Considerations

- Proper use of Power Planes and Polygons for power distribution and heat dissipation;

- Right placement and connection of Critical components;

  Critical Components are:

  - Bypass capacitors (C7, C13)
  - OCSet resistor (R12)
  - Rt (R9)
  - Compensation Network

- Separation of AGND and PGND and their proper connection as single point.

Two Examples of SupIRBuck Layout

Double sided

Components will be placed on both sides of the board.

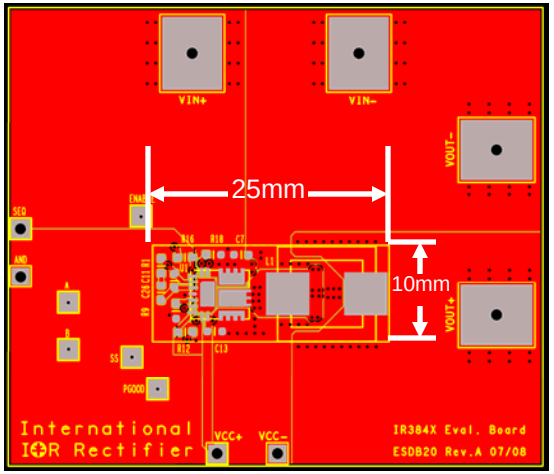

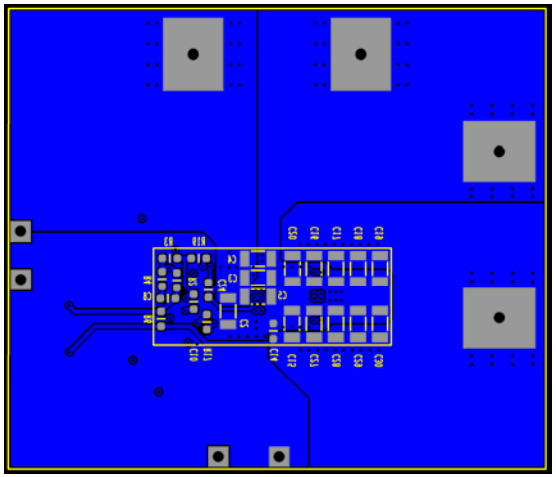

Single sided

Components will be placed just on one side of the board.

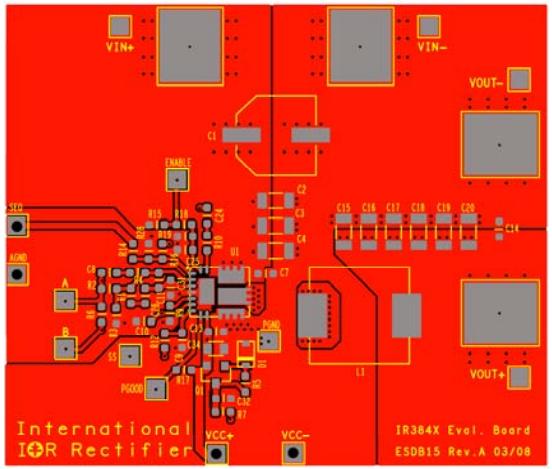

Schematic Example of a Single Sided Board

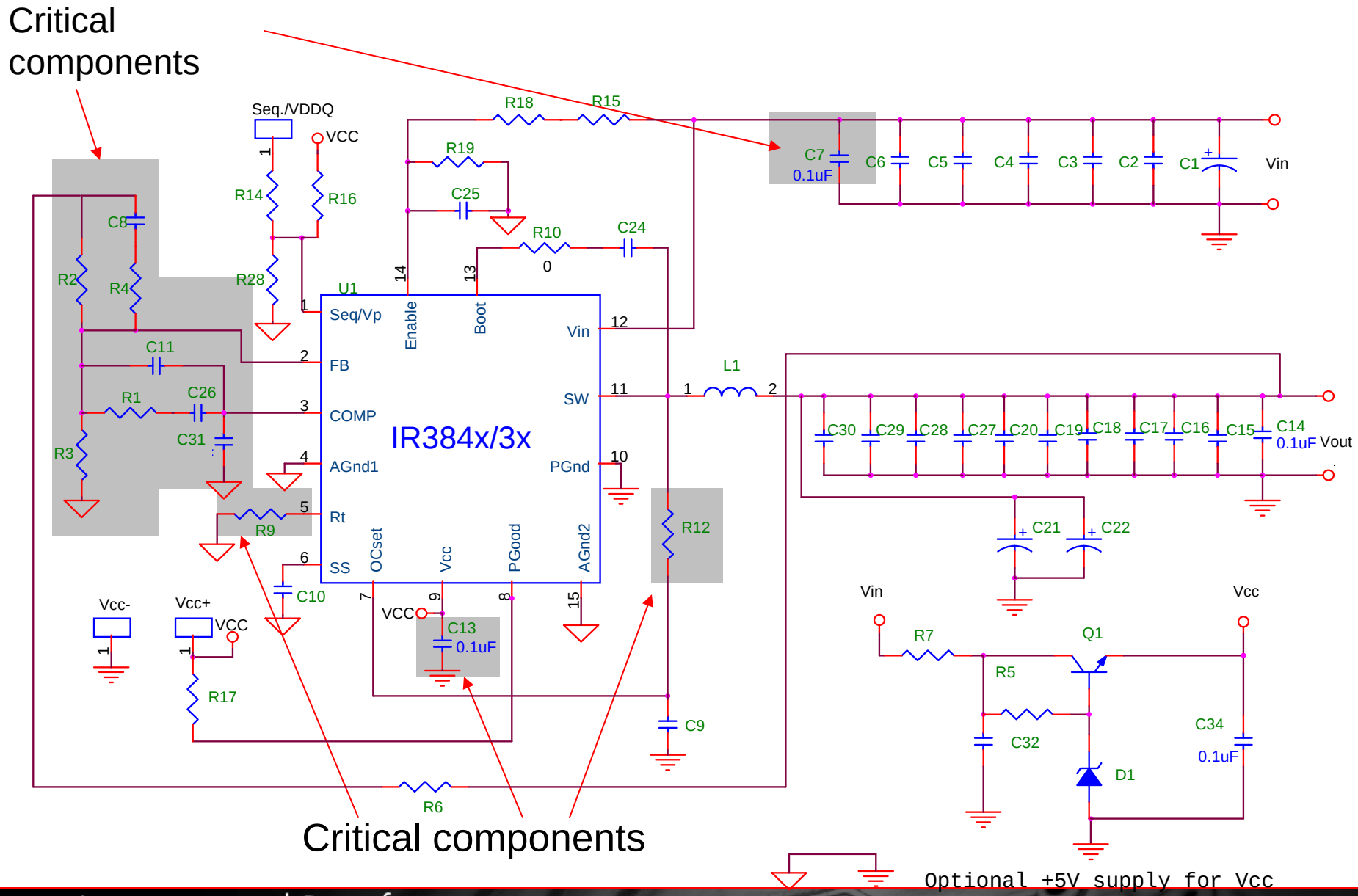

Single Sided Board- Top Layer

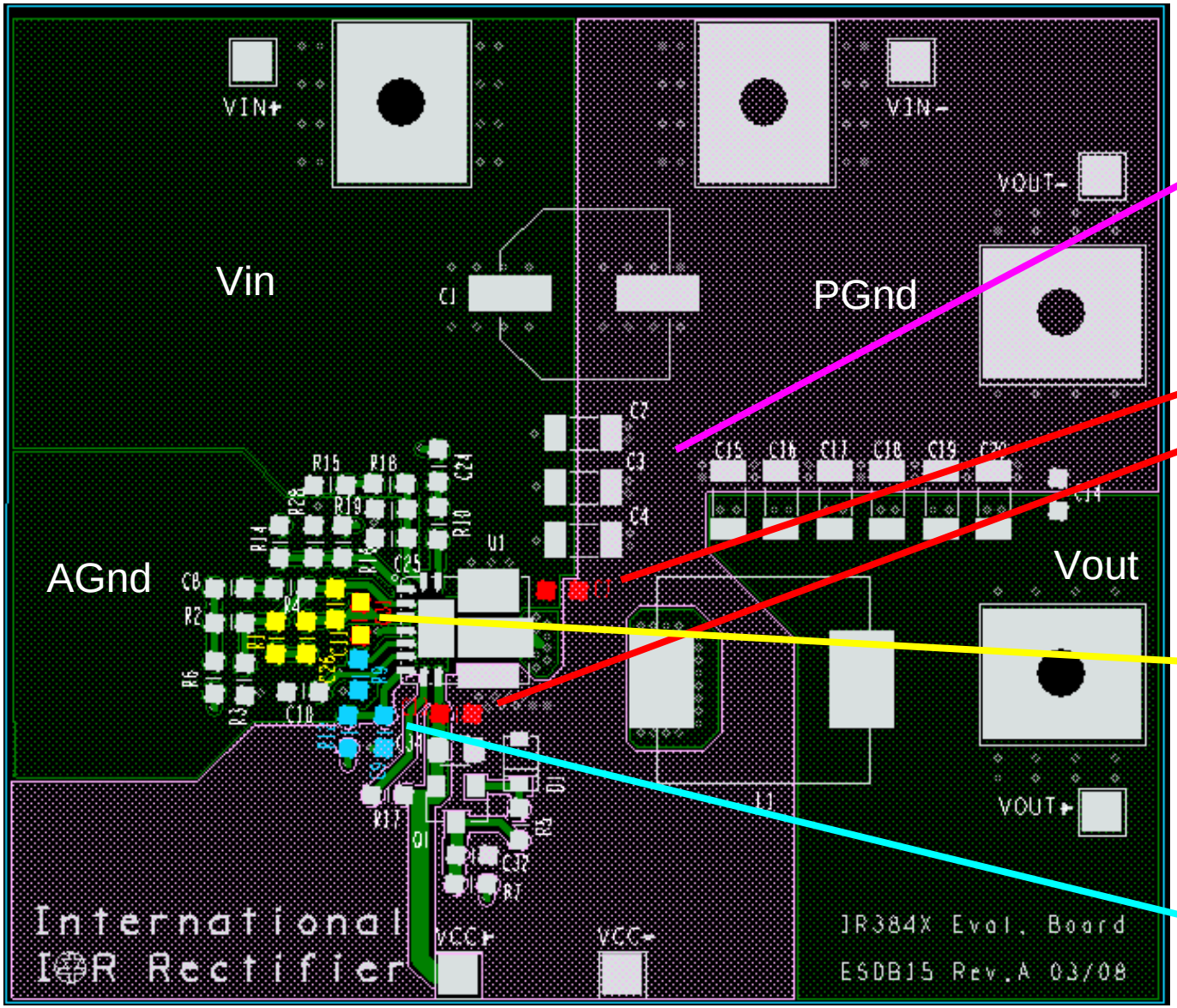

Enough copper & minimum length ground path between Input and Output

All bypass caps should be placed as close as possible to their connecting pins.

Compensation parts should be placed as close as possible to the Comp pin.

Resistors Rt and Rocset should be placed as close as possible to their pins.

Single Sided Board- Bottom Layer

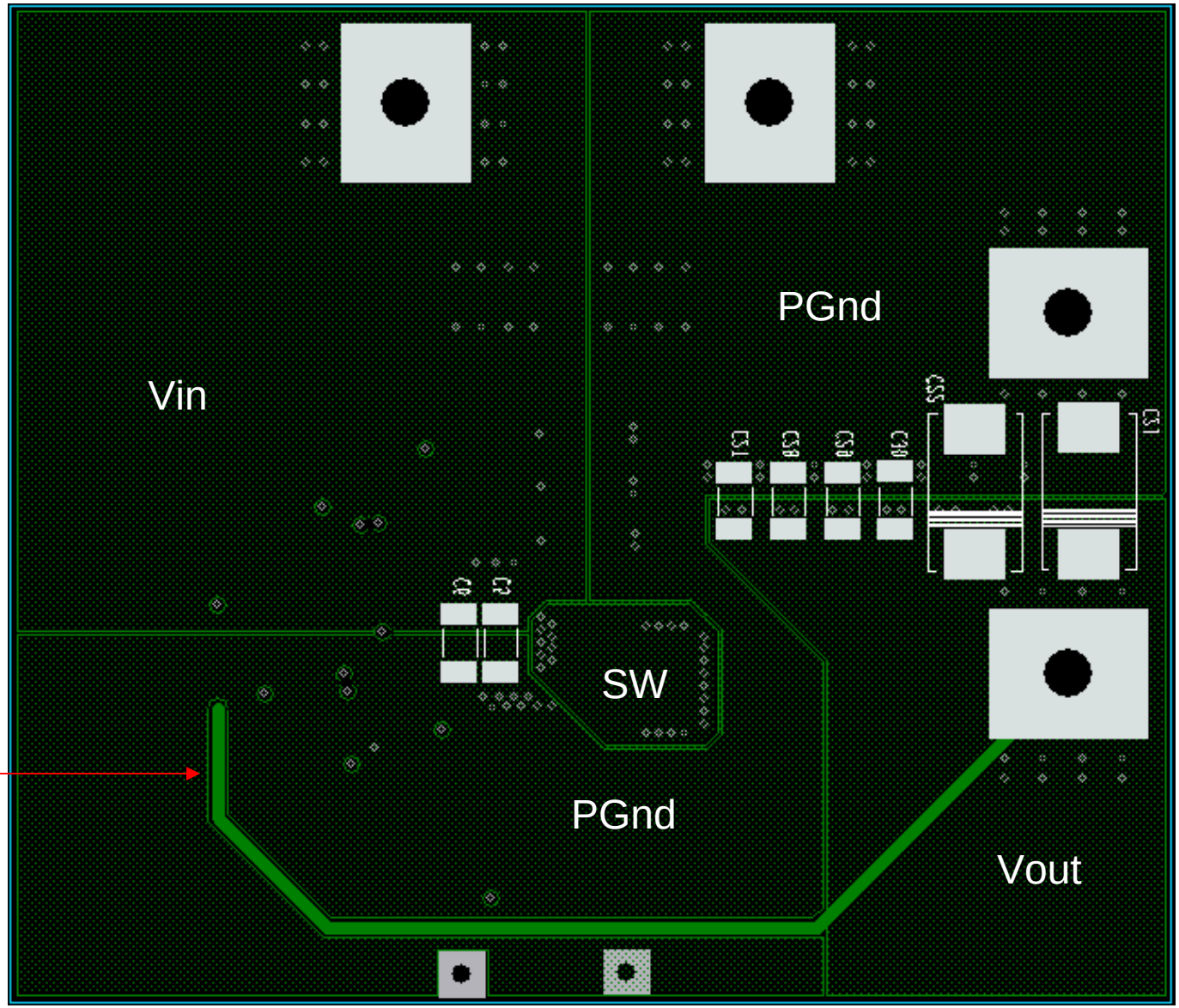

Feedback trace should be kept away form noise sources

Single Sided Board- Mid Layer- I

Analog Ground plane

Single point connection between AGND & PGND, should be close to the SupIRBuck, kept away from noise sources.

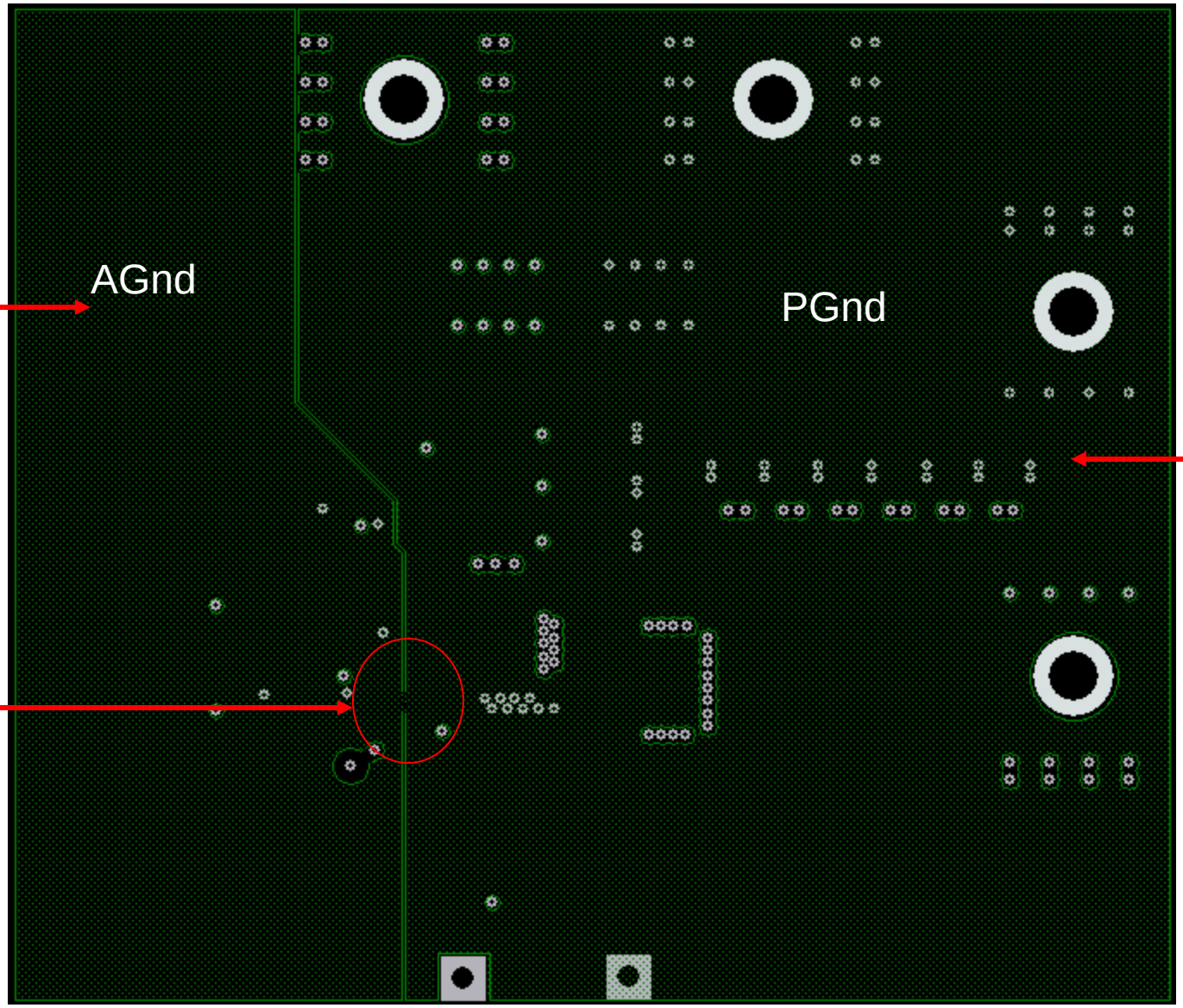

Power Ground Plane

Single Sided Board- Mid Layer- II

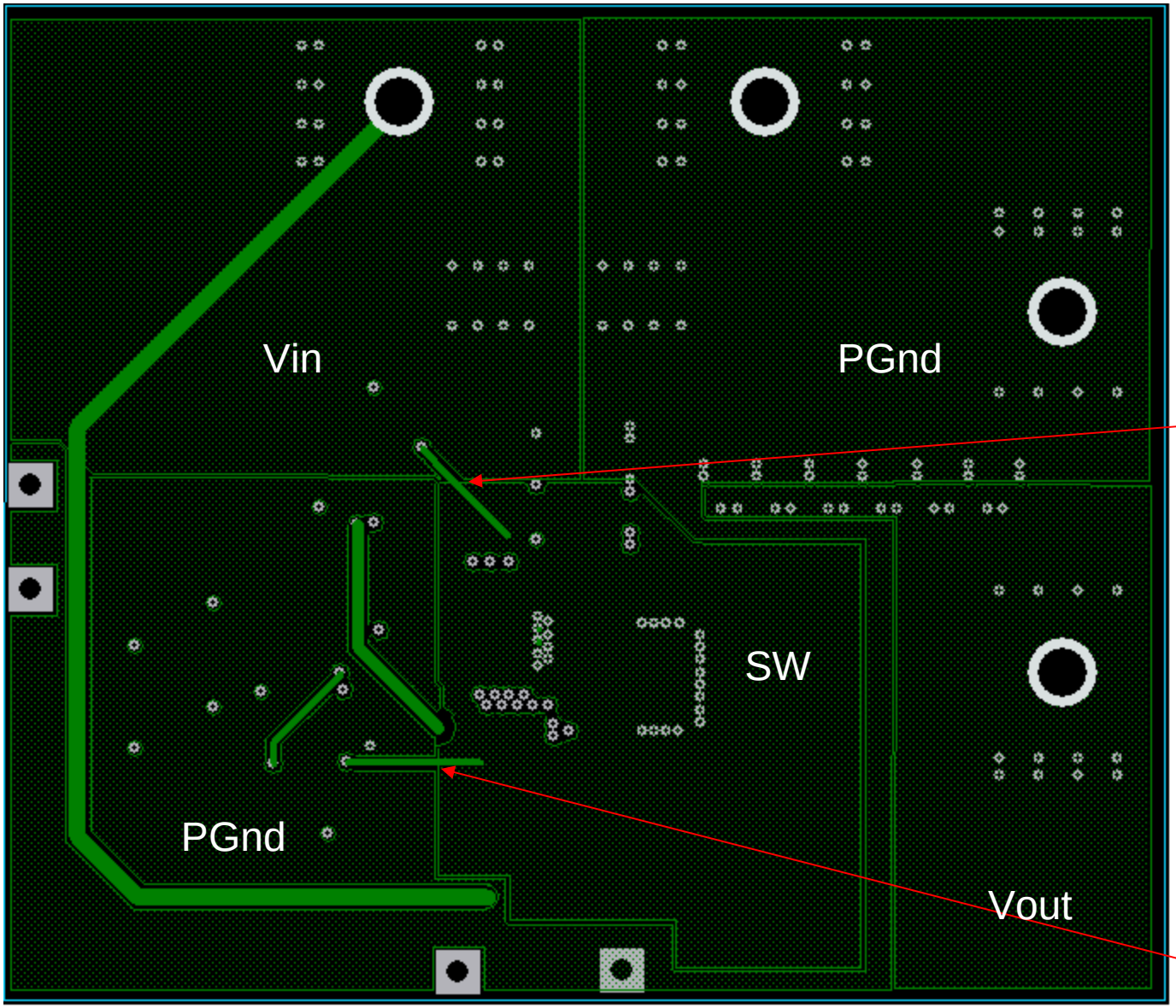

Use separate traces for connecting Boost cap and Rocset to the switch node and with the minimum length traces. Avoid big loops.

Schematic Example of a Double Sided Board

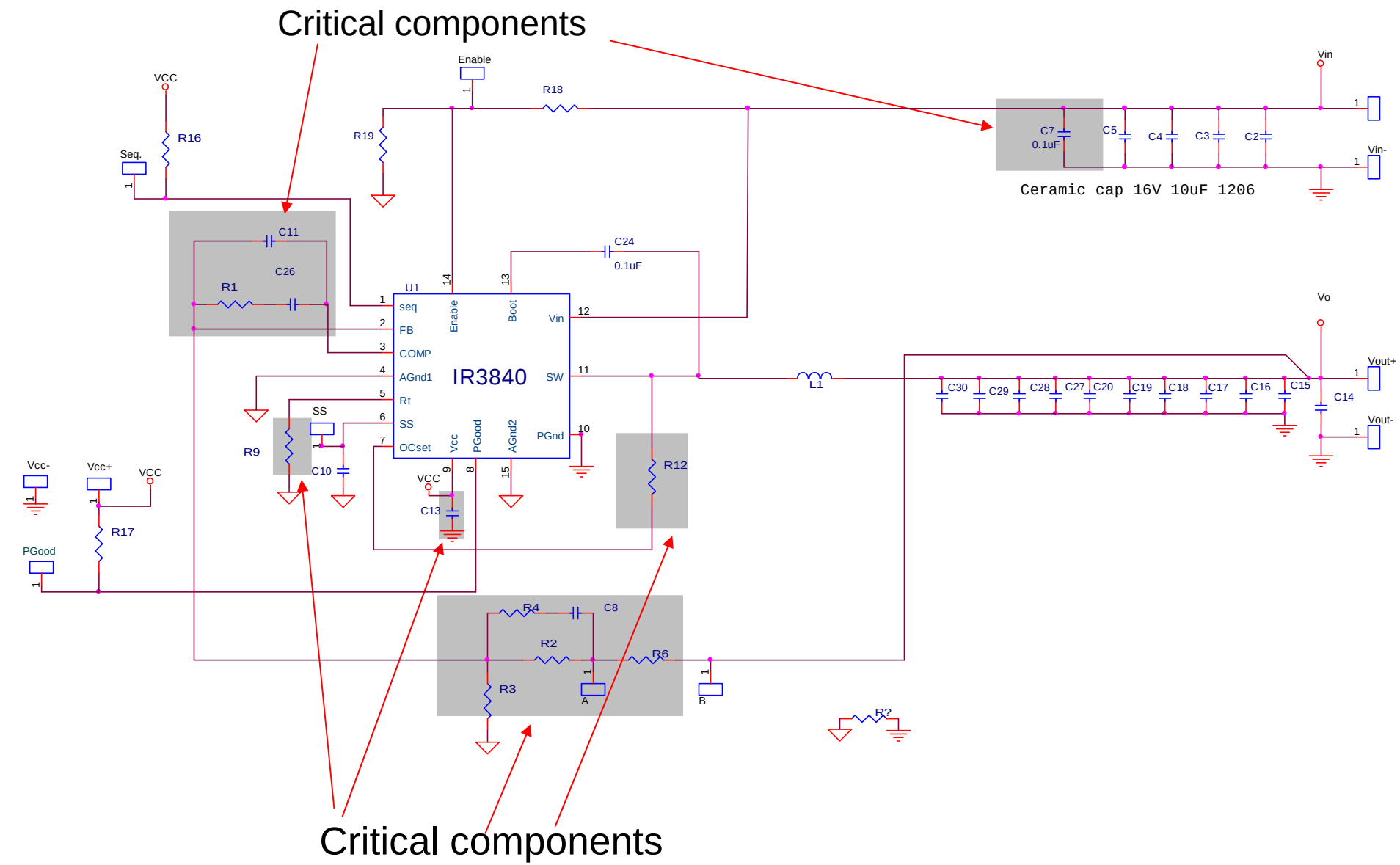

Double Sided Board- Top Layer

Compensation parts should be placed as close as possible to the Comp pin.

Separate switch node and output with power ground.

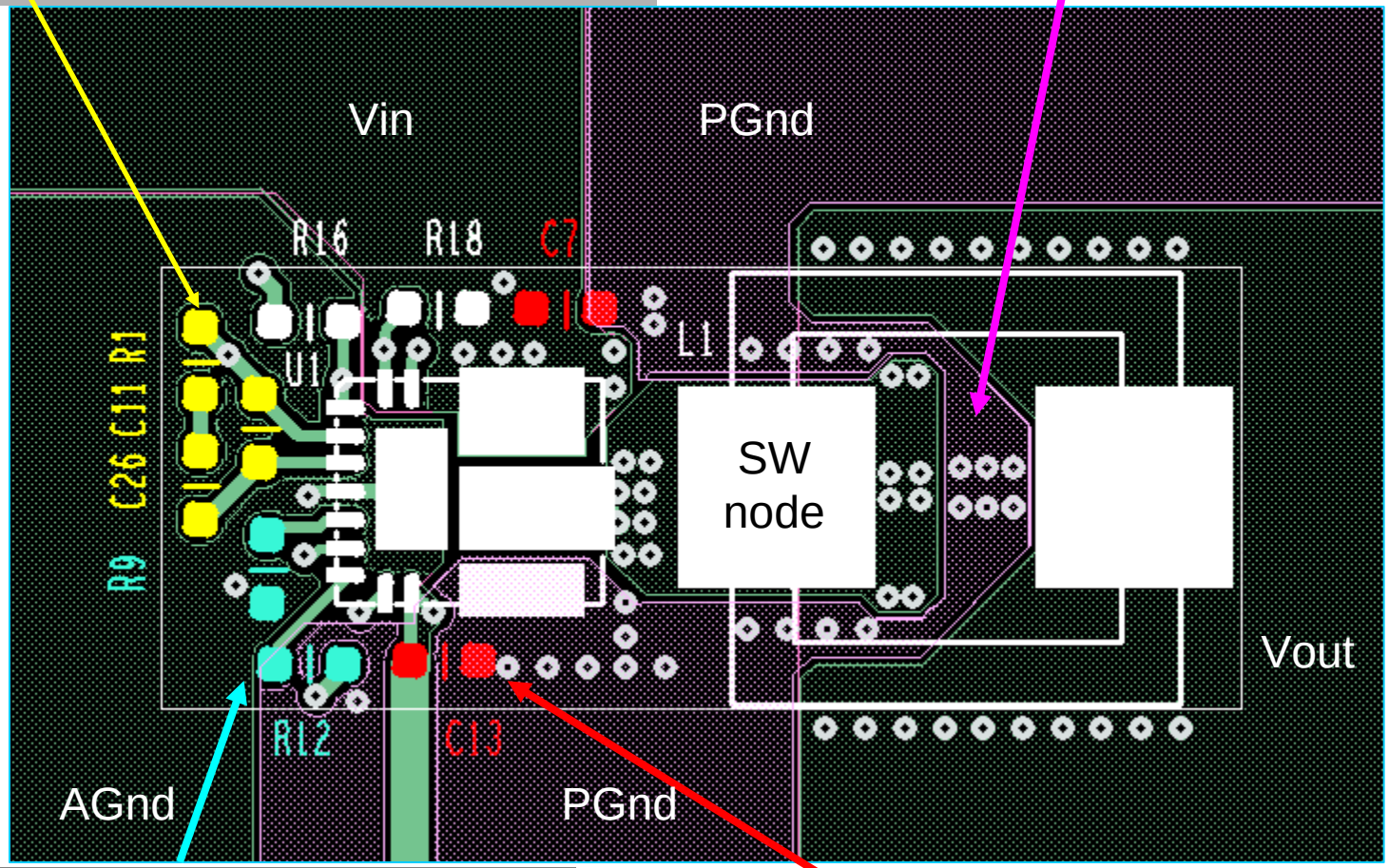

Resistors Rt and Rocset should be placed as close as possible to their pins.

All bypass caps should be placed as close as possible to their connecting pins.

Double Sided Board – Bottom Layer

Enough copper & minimum length ground path between Input and Output, direct connection.

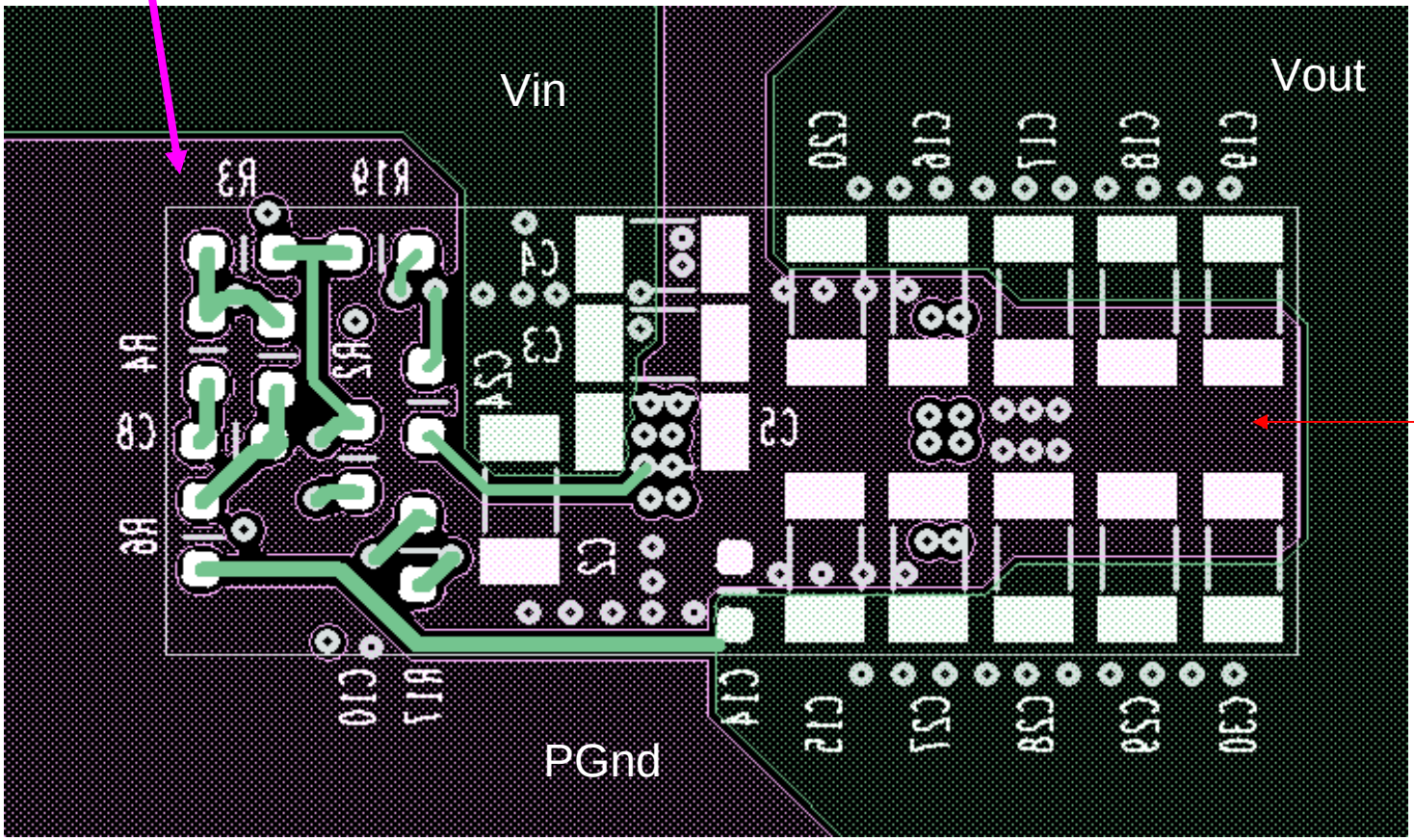

Summary

- All bypass caps should be placed as close as possible to their connecting pins.

- Rocset resistor should be placed as close as possible to OCSet Pin.

- Don’t share the Rocset with Boot cap for connection to SW node, use Kelvin connection from Roscet to SW with short trace. Avoid Big Loops.

- Compensation parts should be connected without via and as close as possible to their pins.

- The single point connection of Analog ground and Power ground should be placed close to the SupIRBuck and kept away form noise sources.

- Minimum length ground path and enough copper for Input and Output caps with direct connection.

- Any margining circuit that would be connecting to Vp or Feedback should be located relatively close to the SupIRBuck.