Case Outline and Dimensions - 18 pin LCC (HEXFET)

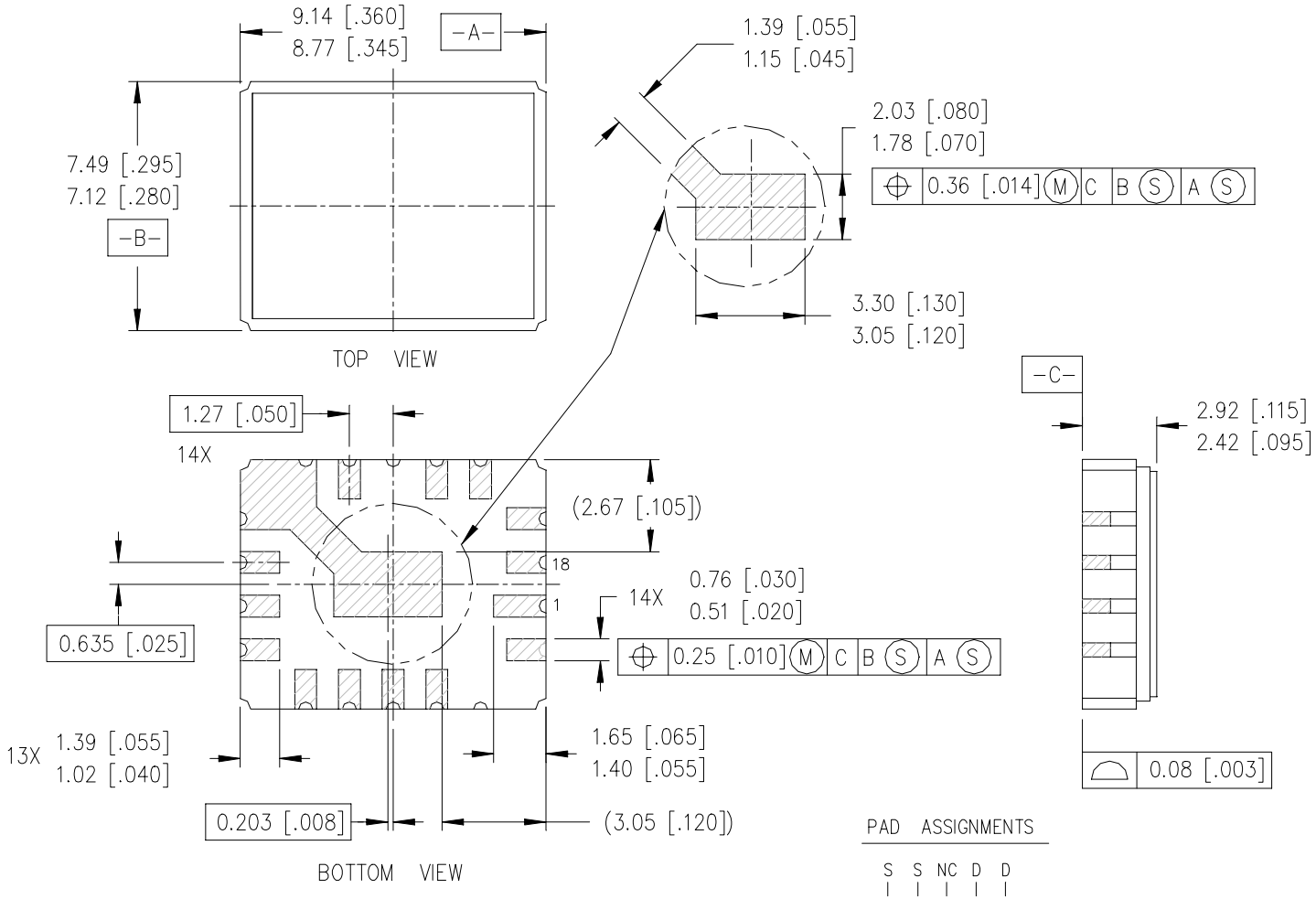

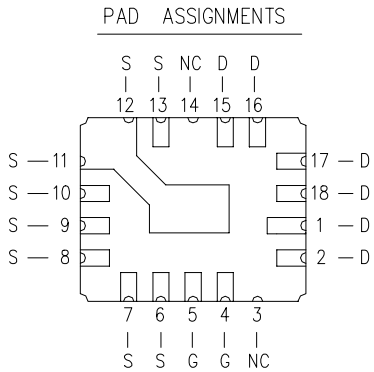

LEGEND

G = GATE
D = DRAIN
S = SOURCE
NC = NO CONNECTION

NOTES:

1. DIMENSIONING & TOLERANCING PER ANSI Y14.5M-1982.
2. CONTROLLING DIMENSION: INCH.
3. DIMENSIONS ARE SHOWN IN MILLIMETERS [INCHES].