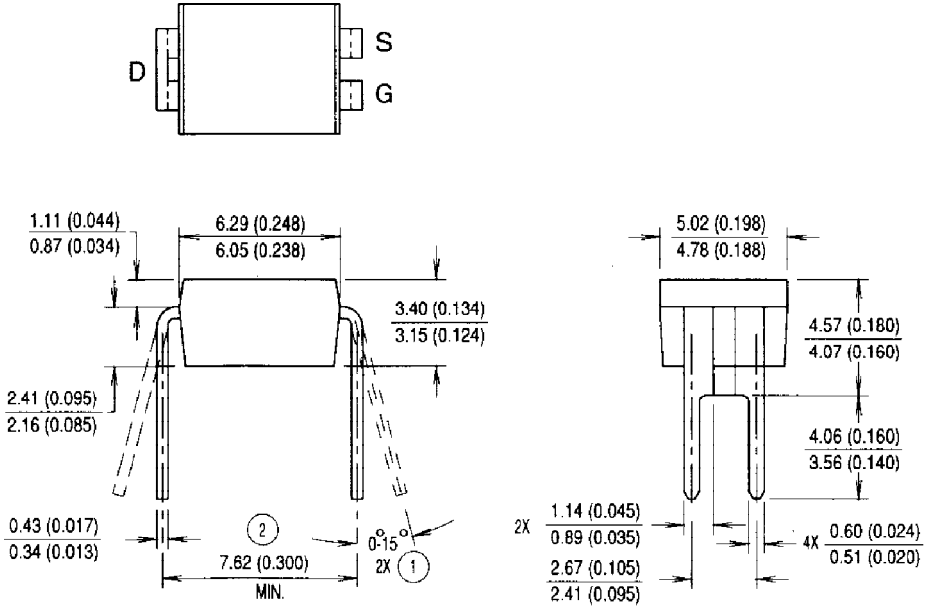Package Outline HEXDIP